Back

FURUNO

INSTALLATION MANUAL

COLOR SCANNING SONAR

MODEL CSH-83/84

FURUNO ELECTRIC CO., LTD.
NISHINOMIYA, JAPAN

ECF

(Elemental Chlorine Free)

The paper used in this manual is elemental chlorine free.

© FURUNO ELECTRIC CO., LTD.

9-52 Ashihara-cho,
Nishinomiya 662-8580, JAPAN

Telephone : 0798-65-2111
Fax : 0798-65-4200

FURUNO Authorized Distributor/Dealer

All rights reserved. Printed in Japan

FIRST EDITION : OCT. 1997
H3 : OCT. 05, 2006

Pub. No. IME-13090-H3

(TATA) CSH-83/84

00080806812

IME13090H30

⚠ SAFETY INSTRUCTIONS

⚠ WARNING

Do not open the cover unless totally familiar with electrical circuits and service manual.

High voltage exists inside the equipment, and a residual charge remains in capacitors several minutes after the power is turned off. Improper handling can result in electrical shock.

Turn off the power at the switchboard before beginning the installation.

Fire or electrical shock can result if the power is left on.

Do not install the equipment where it may get wet from rain or water splash.

Water in the equipment can result in fire, electrical shock or equipment damage.

Be sure no water leaks in at the transducer installation site.

Water leakage can sink the vessel. Also confirm that the transducer will not loosen by ship's vibration. The installer of the equipment is solely responsible for the proper installation of the equipment. FURUNO will assume no responsibility for any damage associated with improper installation.

⚠ WARNING

Install the specified transducer tank in accordance with the installation instructions. If a different tank is to be installed the shipyard is solely responsible for its installation, and it should be installed so the hull will not be damaged if the tank strikes an object.

The tank or hull may be damaged if the tank strikes an object.

If a steel tank is installed on a wooden or FRP vessel, take appropriate measures to prevent electrolytic corrosion.

Electrolytic corrosion can damage the hull.

Be sure that the power supply is compatible with the voltage rating of the equipment.

Connection of an incorrect power supply can cause fire or equipment damage. The voltage rating of the equipment appears on the label above the power connector.

⚠ CAUTION

Ground the equipment to prevent electrical shock and mutual interference.

Observe the following compass safe distances:

	Standard	Steering
Display unit for CSH-83	0.9 m	0.68 m
Display unit for CSH-84	1.7 m	1.3 m
Processor unit	1.70 m	1.05 m

TABLE OF CONTENTS

1. SYSTEM CONFIGURATION 1-1

2. EQUIPMENT LISTS 2-1

3. MOUNTING THE EQUIPMENT

3.1 Mounting the Hull Unit and Receiver Unit 3-1
3.2 Mounting the Display Unit and Sub-Display Unit (option) 3-7
3.3 Mounting the Transmitter Unit 3-8
3.4 Mounting the Power Unit 3-8
3.5 Mounting the Interface Unit 3-8
3.6 Mounting the FNZ Joint Box 3-8
3.7 Grounding the Equipment 3-9

4. WIRING

4.1 Cable Configuration 4-1
4.2 How to Use the Crimping Tool and Pin Extractor 4-2
4.3 Location of Connectors 4-3
4.4 Cable Fabrication and Connector Assembling in Display and Interface Units 4-4
4.5 Cable Fabrication and Connector Assembling in Power Unit 4-7
4.6 Cable Fabrication and Connector Assembling in Transmitter Unit 4-9
4.7 Cable Fabrication and Connector Assembling in Hull Unit (incl. receiver unit) 4-11
4.8 Connection of Transducer Cables 4-13
4.9 Connection of Interface Unit 4-14
4.10 Connection of Sub-Display Unit (option) 4-19
4.11 Connection of Remote Display Unit (option) 4-20
4.12 Synchronizing Transmission with Other Sonars or Echo Sounders 4-21
4.13 Interlocking Operation with Other Sonars 4-22

5. CHANGING POWER SPECIFICATIONS

6. INSTALLATION OF FRP RETRACTION TANK

6.1 Before Beginning the Installation 6-1
6.2 Installation of the FRP Retraction Tank 6-1

7. ADJUSTMENT AND CHECK
7.1 Hull Unit Check 7-1
7.2 Heading Adjustment 7-2
7.3 DIP Switch Setting in the Display Unit 7-3
7.4 Setting and Adjustment in the Interface Unit 7-5

8. WHEN SHIP'S MAINS IS 24 VDC 8-1

9. PROCESSOR UNIT CSH-835 (BLACKBOX TYPE FOR CSH-83) 9-1

SPARE PARTS, INSTALLATION MATERIALS, ACCESSORIES A-1
OUTLINE DRAWINGS D-1
INTERCONNECTION DIAGRAMS S-1

This page is intentionally left blank.

1. SYSTEM CONFIGURATION

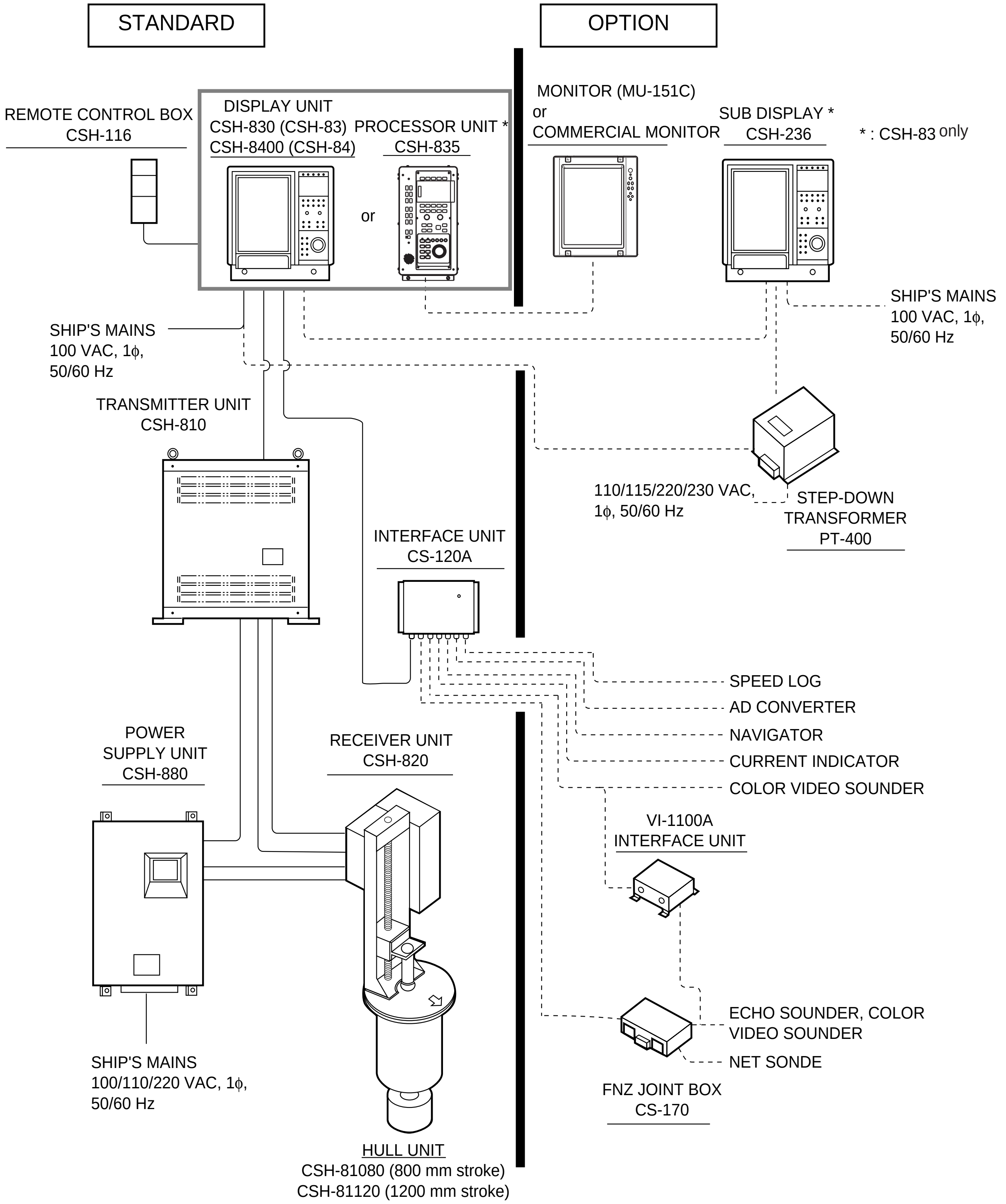

2. EQUIPMENT LISTS

Standard Supply

Name	Type	Qty	Remarks	
Display Unit	CSH-830	Select one	For CSH-83	
	CSH-8400		For CSH-84	
Processor Unit	CSH-835		Blackbox type for CSH-83	
Transmitter Unit	CSH-810	1		
Receiver Unit	CSH-820	1	w/hull unit	
Hull Unit	CSH-81080	1	stroke 800mm	
	CSH-81120		stroke 1200mm	
Power Unit	CSH-880	1		
Remote Control Box	CSH-116	1		
Interface Unit	CS-120A	1		
Installation Materials	CP10-03000	1 set	CP10-03010	For CSH-83
			6 pair cable	
	CP10-03600	1 set	CP10-03610	For CSH-84
			6 pair cable	
	CP10-06600	1 set	CP10-06610	For processor unit
			6 pair cable	
Accessories	FP10-02400	1 set	FP10-01801 FP10-01201 FP10-01203	For CSH-83
			Nylon cover RAM card	
	FP10-01900	1 set	FP10-01201 FP10-01203 FP10-01901	For CSH-84
			Nylon cover RAM card	
	FP10-03000	1 set	FP10-01203	For processor unit
			RAM card	
Spare Parts	SP10-02000	1 set	For CSH-83/84	
	SP10-03600	1 set	For processor unit	

Optional Equipment

Name	Type	Code No.	Remarks
Sub-Display Unit	CSH-236	-	CSH-83 only
Inverter	TR-2435	-	
TR Inverter	TR-24100	-	
Step-down Transformer	PT-400	-	200-230 VAC
37-core Cable	10S1258	000-101-006	Specify length
7-core Cable	10S1259	000-101-007	Specify length
16 Twisted Pair Cable	CO-SPEV-SB-C 0.5x16P	000-101-008	Specify length
E/S Interface Unit	VI-1100A	-	
FNZ Joint Box	CS-170	-	
Mounting Fixture	OP10-9	006-990-040	For CSH-116
Current Limiter Box	CSH-1400	-	See page 8-1.
Extension Cable Set	CSH-1300	000-069-996	For extending transceiver cable
FRP Retraction Tank	OP10-1	000-068-861	
Retraction Tank	SHG-0001	006-904-340	
Hood	FP10-01801	006-027-830	For CSH-83
Filter	OP10-11	006-997-710	For CSH-83
Filter	FP10-02000	000-908-560	For CSH-84
ROM Option Kit A	OP10-15	006-998-620	
ROM Option Kit B	OP10-18	006-998-650	

Optional Tools

Name	Type	Code No.	Remarks
Crimping Tool	06-1001-016	———	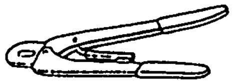
Pin Extractor	06-1877-04	000-519-595	
Guide Pin Setting Tool	10-910-0179-0	———	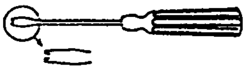

3. MOUNTING THE EQUIPMENT

3.1 Mounting the Hull Unit and Receiver Unit

Location of hull unit

Determine the mounting location through consultation with the shipyard and shipowner. When deciding the location, consider the following points:

- Select an area where propeller noise, cruising noise, air bubbles and interference from turbulence are minimal. Generally, the point at 1/3 to 1/2 of the ship's length from the bow on or near the keel is optimum. On-the-keel installation is advantageous for minimizing oil consumption in comparison with off-the-keel. If the hull unit can not be installed on the keel, the center of the retraction tank should be within 600 mm of the keel to prevent a rolling effect.

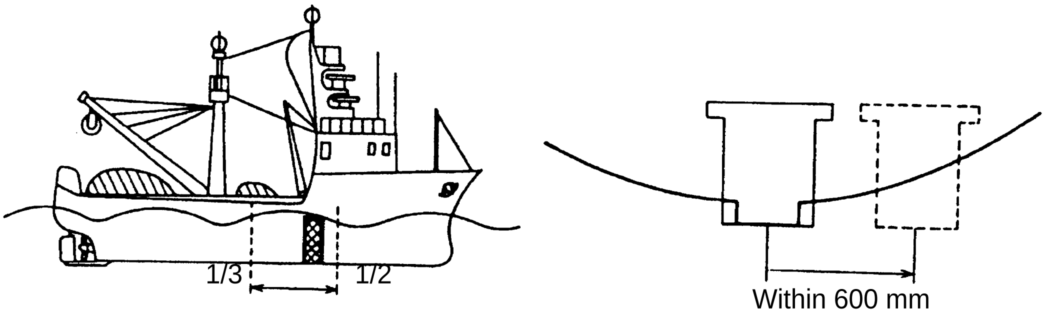

Figure 3-1 Hull unit mounting location

- Select a place where the hull bottom is flat and the draft is sufficiently deep. Normally, the transducer should protrude at least 500 mm beyond the keel to minimize the effect of air foam and bubbles.
- Select a place where interference from other equipment is minimal. Locate the hull unit at least 2.5 m away from the transducers of other equipment.
- No obstacle should be in the fore direction since it causes a shadow zone and aerated water, resulting in poor sonar performance.
- Secure sufficient space for wiring and maintenance. Refer to the hull unit outline drawing for recommended wiring and maintenance space.
- If the ambient temperature of the hull unit is below 0°C, provide the sonar compartment with a heater to keep the temperature above 0°C.

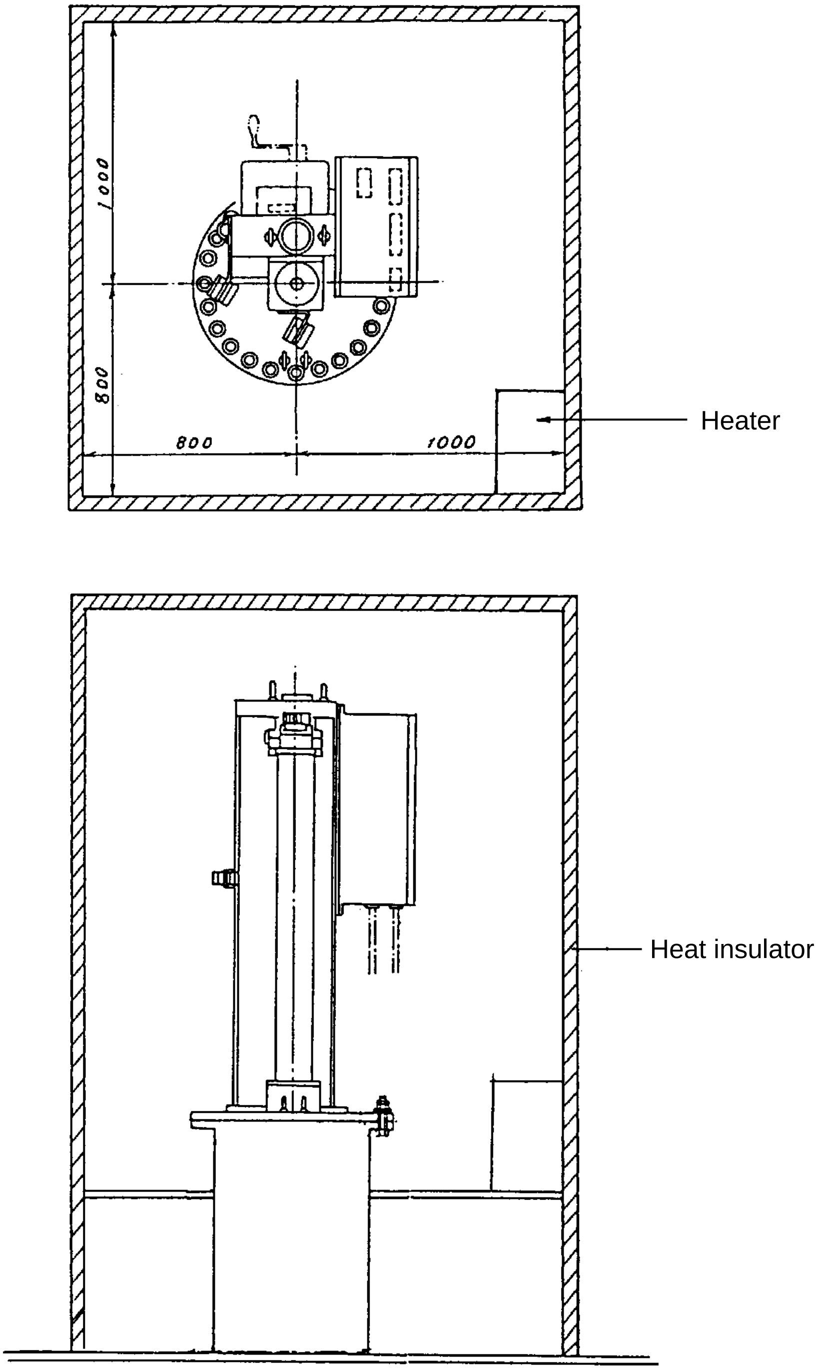

Figure 3-2 Typical sonar compartment

Shortening the retraction tank

The retraction tank is 900 mm in length when supplied. Shorten the tank as necessary so that the transducer is placed well below the keel when it is lowered. The following table provides guidelines for shortening the tank. Refer also to the retraction tank installation drawing at the back of this manual.

Installation Method **XDCR Travel**	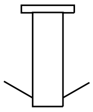	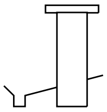	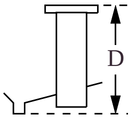	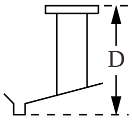
800 mm	Remove 0 to 35 mm from bottom.	Same as left	Remove 0 to 35 mm from bottom. Length D must be less than 1150 mm.	Same as left
1200 mm	Remove 0 to 35 mm from bottom.	Same as left	Remove 0 to 35 mm from bottom. Length D must be less than 1350 mm.	Same as left

Figure 3-3 Guidelines for shortening the retraction tank

Note: When 35 mm is removed and "D" is minimum, the effect of air foam is minimized when the transducer is fully protruding in water.

Remarks on installation of retraction tank

- If possible, the installation location should be of double bottom structure.
- If possible, install the tank on the keel, where the tank can be most firmly fixed.
- Install the reinforcement rib as near as possible to the top of the retraction tank, allowing space for tightening bolts and nuts.

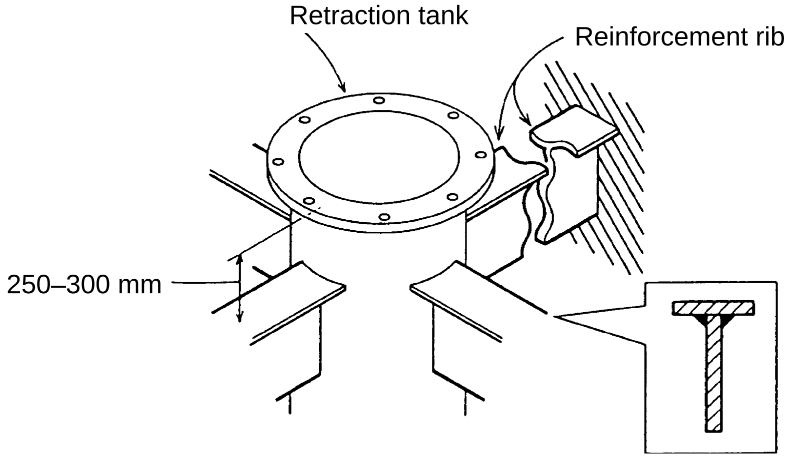

Figure 3-4 Installation of reinforcement ribs

- When an attachment flange is used, install reinforcement ribs to the attachment flange.

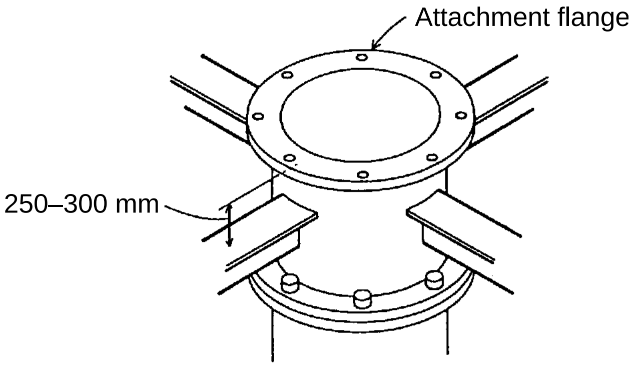

Figure 3-5 Attachment flange

- Add a doubling plate where the retraction tank is welded to the hull bottom. The size of the doubling plate is normally 1200 to 1300 mm in diameter so it lies across two bottom frames.

Installing hull unit on retraction tank

After welding the retraction tank and allowing sufficient time for cooling, install the hull unit as follows:

1. Clean the O-ring and O-ring groove and coat them with a slight amount of grease. Place the O-ring in position on the tank flange.
2. Lay the gasket (1) on the top of the tank flange.
3. Orient the hull unit so that the arrow on its flange points toward the ship's bow.
4. 7 of the 16 bolt holes on the hull unit flange have already been fitted with bolts. Insert the gasket (2) into the bolt holes of the tank flange to which these seven bolts are fitted. Note that it is difficult to fit them after the hull unit has been placed on the tank.
5. Confirm that the O-ring and the gasket (1) are in position. Place the hull unit on the tank.
6. Coat every bolt, washer and nut with slight amount of grease to ease removal. Fit the insulation gasket (2) into the bolt holes of both the tank and hull unit flanges. Fasten the hull unit to the retraction tank with gasket (2), flat washers, spring washers and hex bolts.
7. Reinforce the hull unit against vibration by extending stays to the ship's hull from the two eye bolts at the top of the hull unit, referring to figure at the top of the next page.

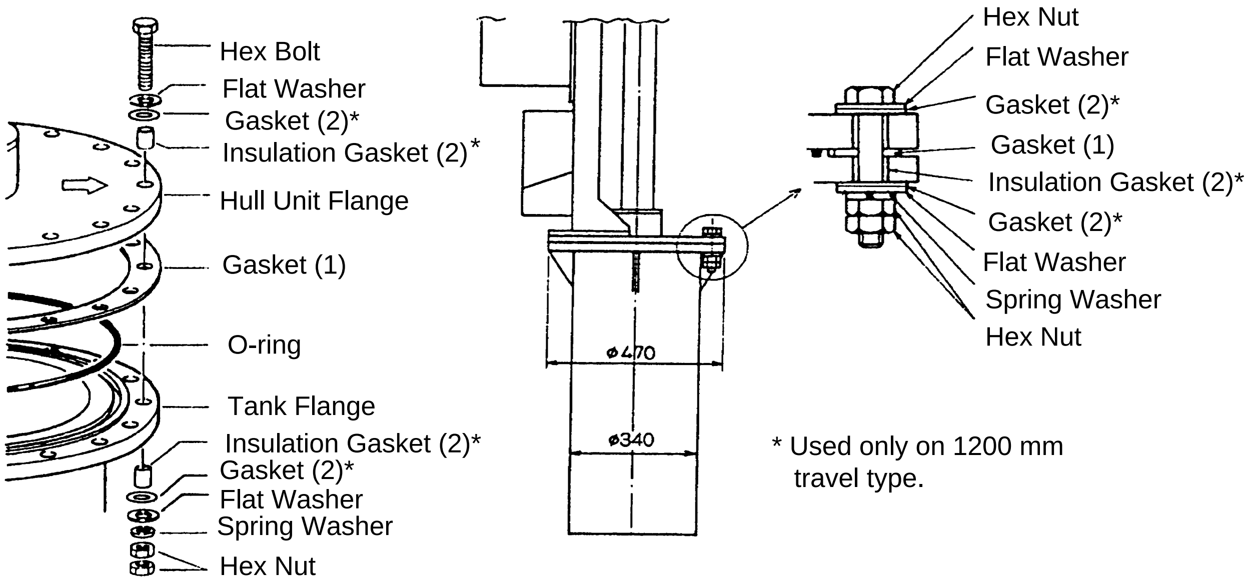

Figure 3-6 Installation of hull unit

Installing stays (anti-vibration measure)

Install stays from the top of the hull unit to the ship's hull. The stays should be angle iron with a size of 75 x 75 x 9 mm or more and at least two pieces should be used; one each to ship's bow and stern directions. If possible, install two more stays in ship's transverse direction.

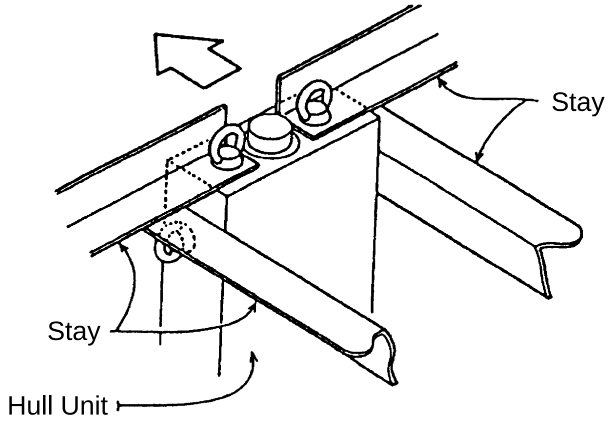

Figure 3-7 How to install stays

Do not install the stays vertically as shown below. Vibration-resistance effect is reduced since vibration is applied to the stays as rotation force. Install them horizontally.

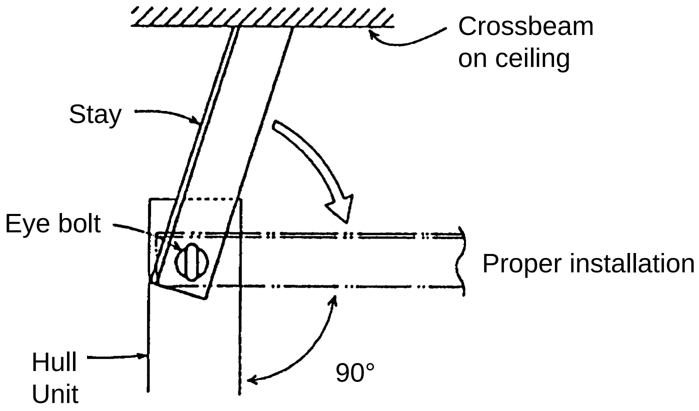

Figure 3-8 Proper and improper installation of stays

Fastening receiver unit to hull unit

Fasten the receiver unit to the left side of the hull unit as shown at right.

A transducer cable protection cover has been fitted where the receiver unit is to be fastened to the hull unit. Remove it when mounting the receiver unit.

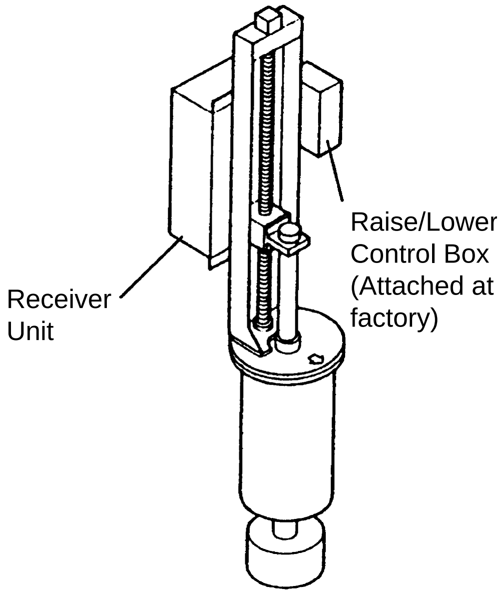

Figure 3-9 Fastening the receiver unit to the hull unit

3.2 Mounting the Display Unit and Sub-Display Unit (option)

The display unit and sub-display unit are designed for tabletop mounting. When selecting a mounting location, consider the following conditions:

- Place where operating personnel are able to control the unit easily while observing the fishing ground or the area surrounding the vessel.
- Place at least 1 m away from a magnetic compass and equipment which have a magnet (radar magnetron, loudspeaker, high power transformer, etc.).
- Place not exposed to direct sunlight, water splashes or hot air.
- Place where maintenance and ventilation clearance shown in the outline drawings is ensured.
- Place where the CRT face is within ±45° from vertical.

Mounting the display unit/sub-display unit

1. Remove the mounting base by unscrewing the two bolts at the front bottom.
2. Fix the mounting base to the table by using four M10 bolts, flat washers, spring washers and nuts. It is recommended that a rubber mat be placed under the mounting base to absorb vibration.
3. Fasten the unit to the mounting base with two bolts. When the space around the unit is limited, make wirings to the display unit first and then fasten the unit.

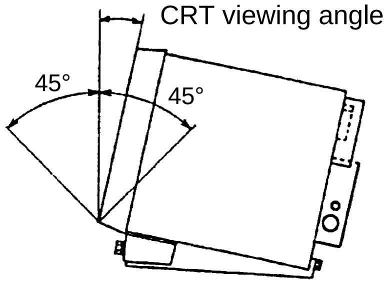

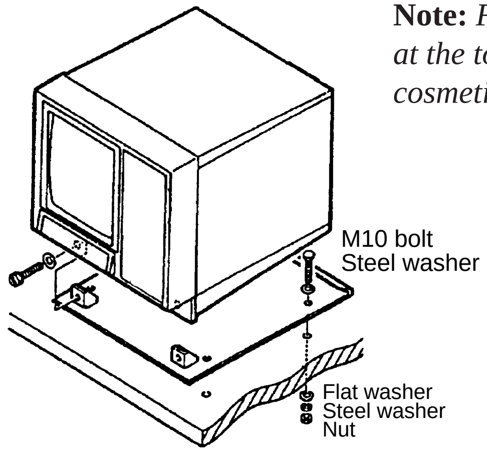

Note: *For the CSH-84, remove eye bolts at the top of the display unit and set cosmetic screws to eye bolt holes.*

Figure 3-10 Mounting the display unit and sub-display unit

3.3 Mounting the Transmitter Unit

The transmitter unit can be mounted with or without mounting legs. For use without mounting legs remove them and use inside mounting holes.

Reinforce the transmitter unit against vibration by stays extending from the eyebolts on the top of the unit.

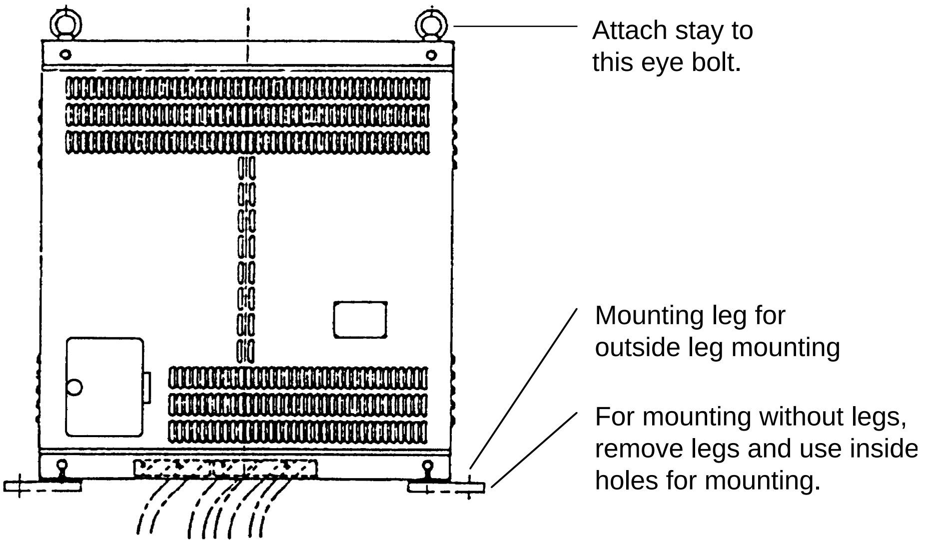

Figure 3-11 Transmitter unit

3.4 Mounting the Power Unit

The power unit can be installed in any dry, well-ventilated place.

3.5 Mounting the Interface Unit

The interface unit connects with several navigation and fishing equipment, so determine the installation site with the wiring to them taken into account. Furthermore, the unit incorporates a data selector and self-check switch, therefore select a place where they can be easily operated.

3.6 Mounting the FNZ Joint Box

The FNZ joint box interchanges both Tx trigger and sounder marker pulses from the echo sounder and the net sonde. Therefore, install it as close as possible to the net-sonde indicator.

3.7 Grounding the Equipment

Ground all units with a suitable copper strap or ground wire. The location of the ground terminal on each unit is shown below.

⚠ CAUTION

Ground the equipment to prevent electrical shock and mutual interference.

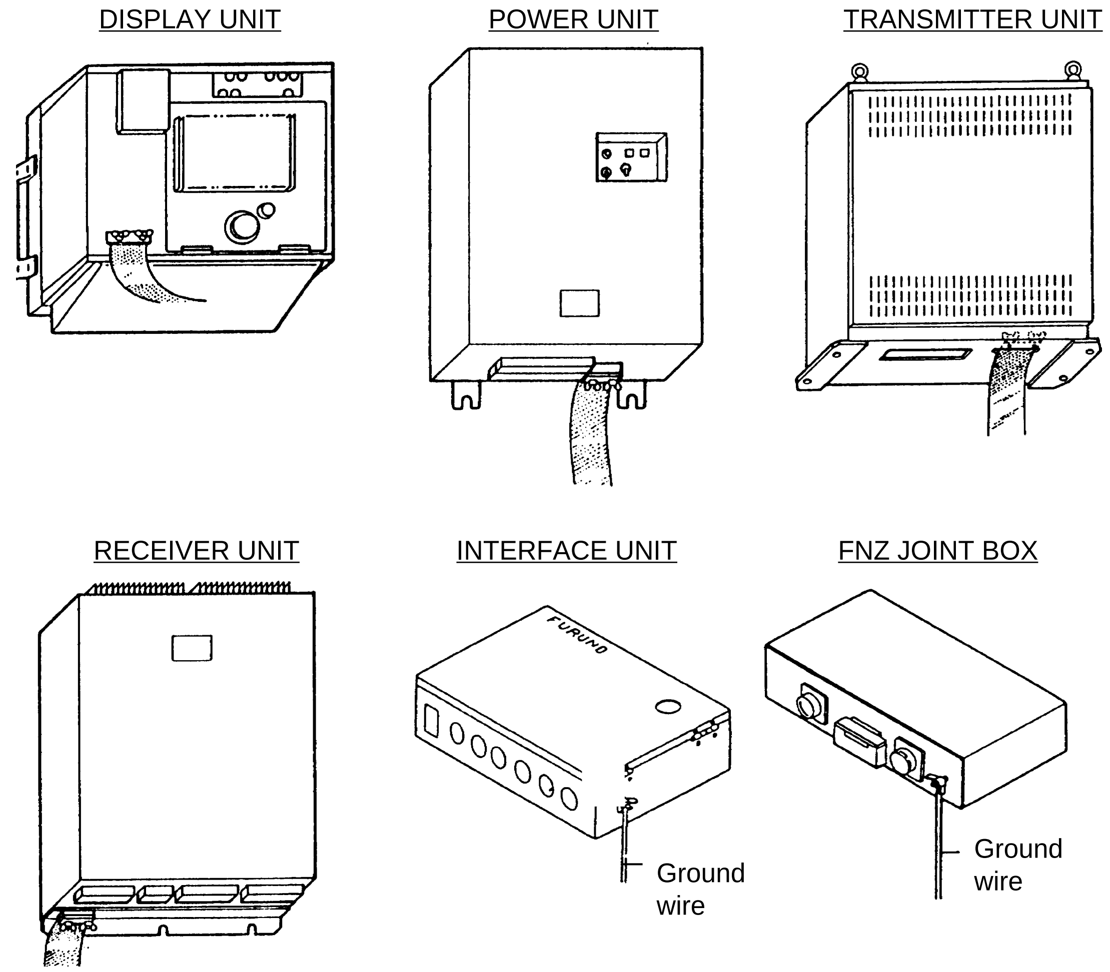

Figure 3-12 Location of ground terminals on equipment

4. WIRING

This chapter provides the information necessary for wiring the CSH-83/84. Wire the equipment referring to the drawings shown in the table below.

Display Unit CN-A5	Interface Unit J201
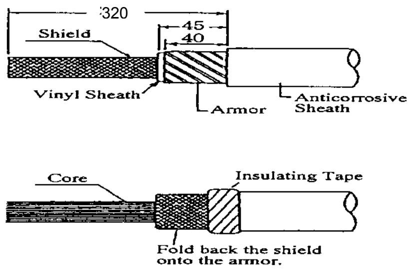	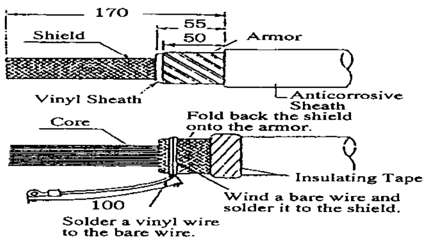

4.1 Cable Configuration

10S1258

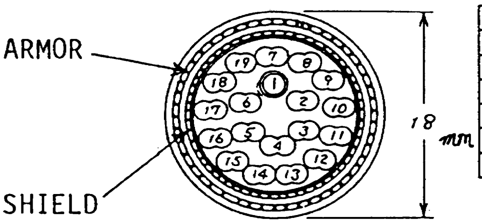

NO.	COLOR	NO.	COLOR	NO.	COLOR
2	BLK/BRN	8	BLK/PPL	14	BRN/GRN
3	BLK/RED	9	BLK/GRY	15	BRN/BLU
4	BLK/ORG	10	BLK/WHT	16	BRN/PPL
5	BLK/YEL	11	BRN/RED	17	BRN/GRY
6	BLK/GRN	12	BRN/ORG	18	BRN/WHT
7	BLK/BLU	13	BRN/YEL	19	RED/ORG

10S1259-1

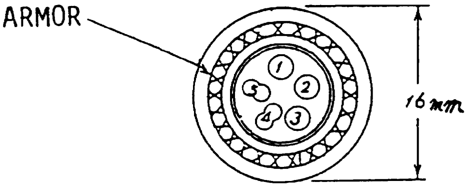

NO.	COLOR
1	BLK
2	WHT
3	RED
4	BRN/BLK
5	WHT/RED

10S1260

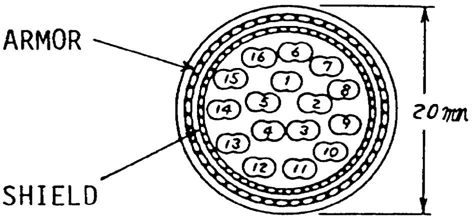

NO.	COLOR	NO.	COLOR	NO.	COLOR
1	YEL/BLK	7	RED/WHT	13	YEL/PPL
2	BLU/BLK	8	GRN/WHT	14	BLU/PPL
3	RED/BLK	9	YEL/GRY	15	RED/PPL
4	GRN/BLK	10	BLU/GRY	16	GRN/PPL
5	YEL/WHT	11	RED/GRY		
6	BLU/WHT	12	GRN/GRY		

10S1261

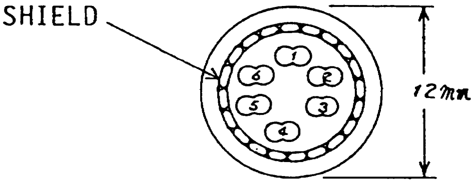

NO.	COLOR	NO.	COLOR
1	BRN/BLK	5	GRN/BLK
2	RED/BLK	6	BLU/BLK
3	ORG/BLK		
4	YEL/BLK		

Figure 4-1 Cable configuration

4.2 How to Use the Crimping Tool and Pin Extractor

A crimping tool is necessary for connection of wires to the contact pins of the 38P connector. The pin extractor removes the contact pin from the connector body. This paragraph describes how to crimp and extract a contact pin.

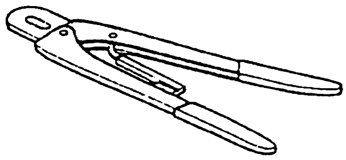		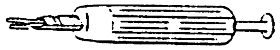
Crimping Tool 06-1001-016	Contact Pin 60-8017-0313-00-339	Pin Extractor 06-1877-04

Figure 4-2a Crimping tool, contact pin, pin extractor

How to use the crimping tool

1. Strip the vinyl sheath of the wire to expose the core by 3.2 mm to 4 mm.
2. Hold the crimping tool horizontally and insert the contact pin with its slit facing downward into the crimp hole on the crimping tool.
3. Insert the wire onto the contact pin and squeeze the handle until the ratchet releases. (Place the wire deep enough into the contact pin so that its end comes in contact with the stopper plate of the crimping tool.) With crimping completed, pull the wire while holding the contact pin to make sure that the pin is fastened tightly.

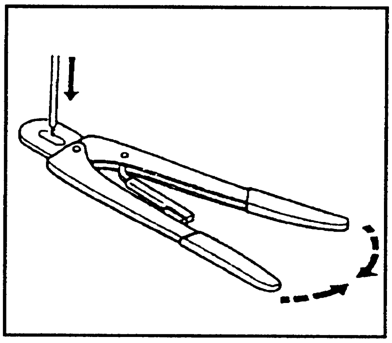

Figure 4-2b Crimping tool

How to use the pin extractor

If a contact pin is inserted into an incorrect hole on the connector body, remove it with the pin extractor.

1. Push the pin extractor into the pin hole from the side opposite to the pin inserting side.
2. Push in the head of the pin extractor. The retaining spring comes free and the contact pin can be removed.

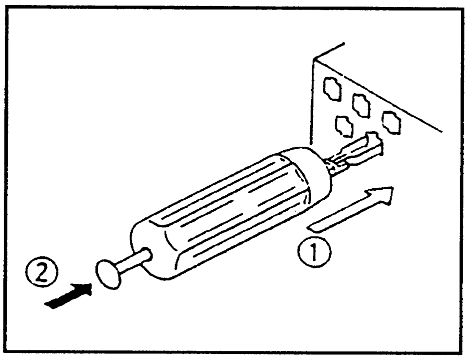

Figure 4-2c Crimping tool

4.3 Location of Connectors

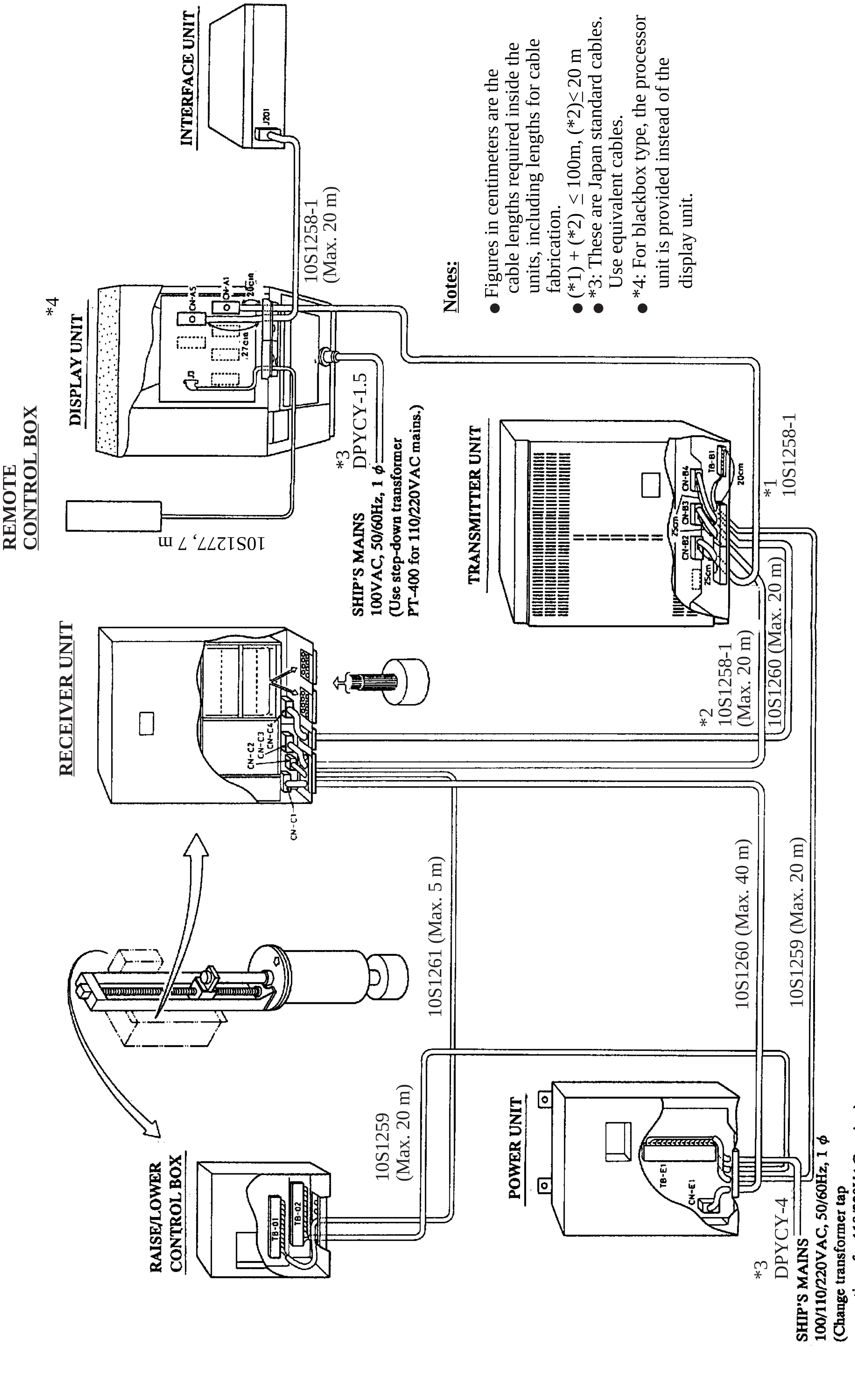

Figure 4-3 Location of connectors

4.4 Cable Fabrication and Connector Assembling in Display and Interface Units

Assembling 38P connector (CN-A1, CN-A5, J201)

Fabrication of cable 10S1258-1

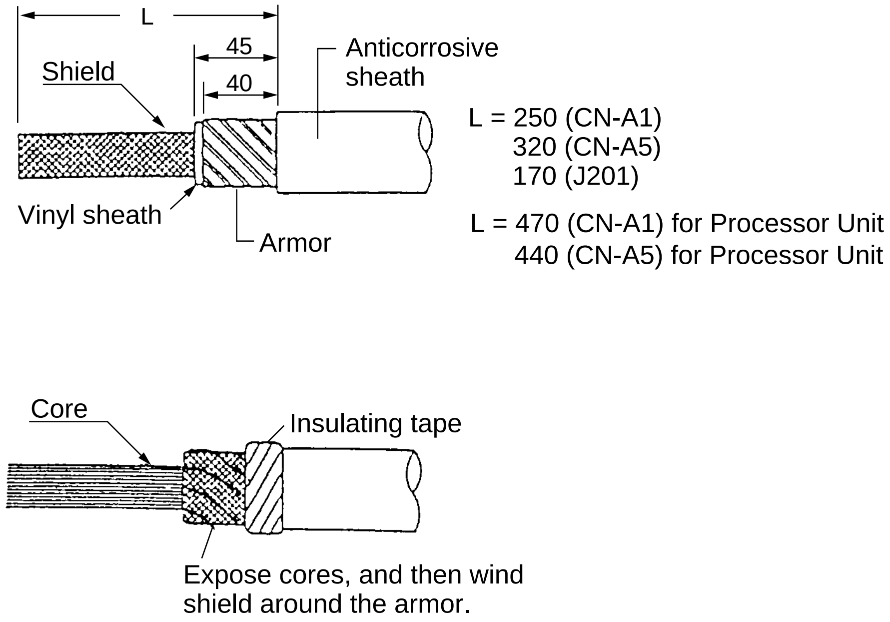

Figure 4-4 Fabrication of cable 10S1258-1

Assembling the 38P connector

Shorten unused wires and wrap their ends with vinyl tape to prevent short circuit.

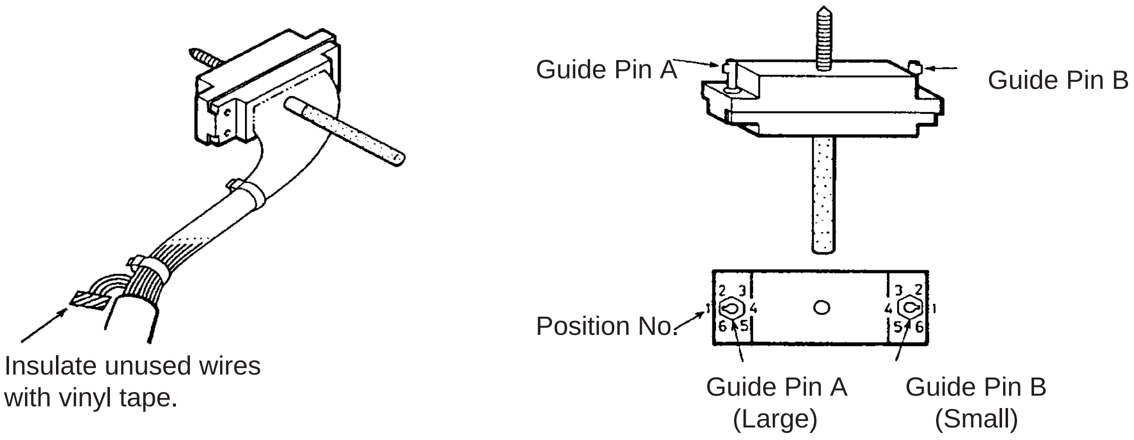

Figure 4-5 How to assemble the 38P connector

Positioning guide pins

The guide pins of the connector identify the mating receptacle. Position them as shown in the table below.

Table 4-1 Connectors CN-A1, CN-A5, J201 and guide pins

Connector / Guide Pin	CN-A1	CN-A5	J201	Guide Pin Setting Tool
Guide Pin A (Large)	1	5	1	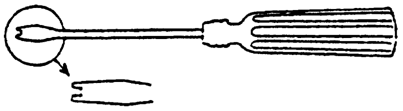 Type 10-910-0179-0
Guide Pin B (Small)	1	1	1	

Clamping the cable

Fix the cable in the clamp where shield is folded back onto the armor.

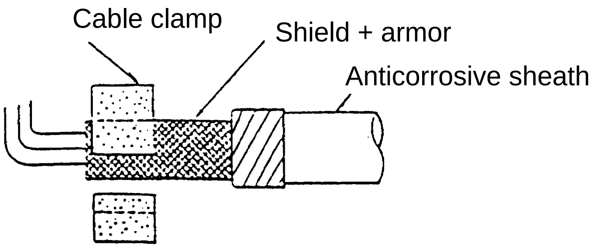

Figure 4-6 Clamping the cable

Assembling connector NCS-253P (CN-A15)

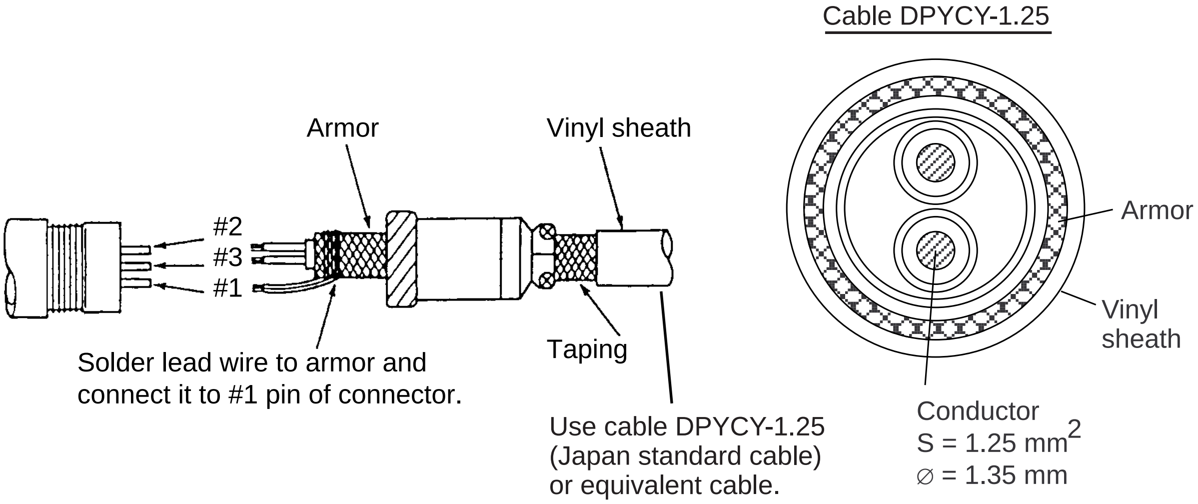

Figure 4-7 Assembling connector NCS-253P

Assembling BNC connector (CN-A7, CN-A8, CN-A9, CN-A10, CN-A11, CN-A12)

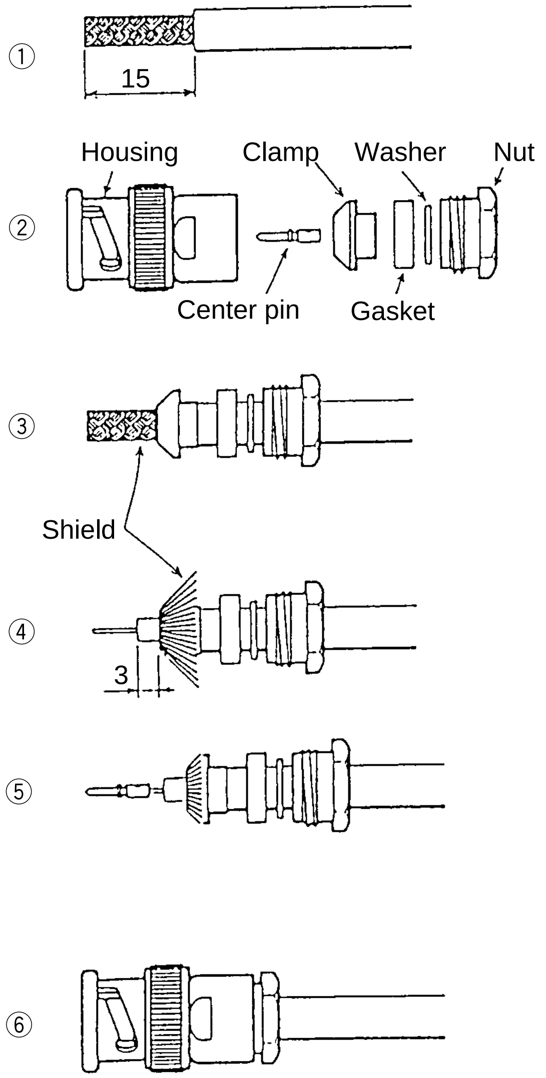

1. Remove vinyl sheath of the cable by 15 mm.
2. Pass the cable through the nut, washer, gasket and clamp.
3. Unravel the shield and fold it back onto the clamp.
4. Shorten the insulator, leaving 3 mm.
5. Trim the shield as shown in the drawing. Solder the center pin to the conductor of the cable.
6. Pass the cable through the housing and tighten the nut.

Figure 4-8 Assembling BNC connector

4.5 Cable Fabrication and Connector Assembling in Power Unit

Assembling 38P connector (CN-E1)

Fabrication of cable 10S1260

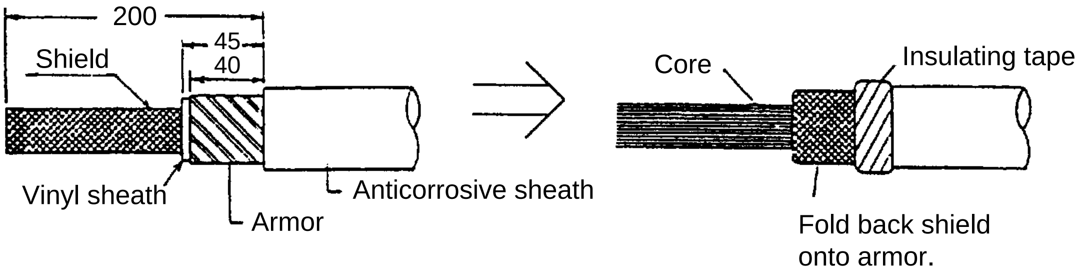

Figure 4-9 Fabrication of cable 10S1260

Assembling the 38P connector

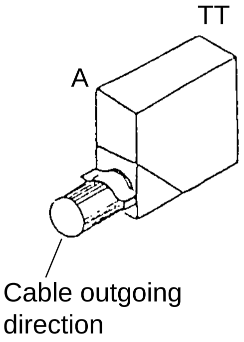

1. Bundle unused wires outside the connector case.
2. Fix the cover ①, noting the cable outgoing direction.
3. Dress the wires and fix the covers ② and ③. Use a fragment of cable sheath to fix the wires at the cable clamp.
4. Shorten unused wires and tape their ends with vinyl tape to prevent short circuit.

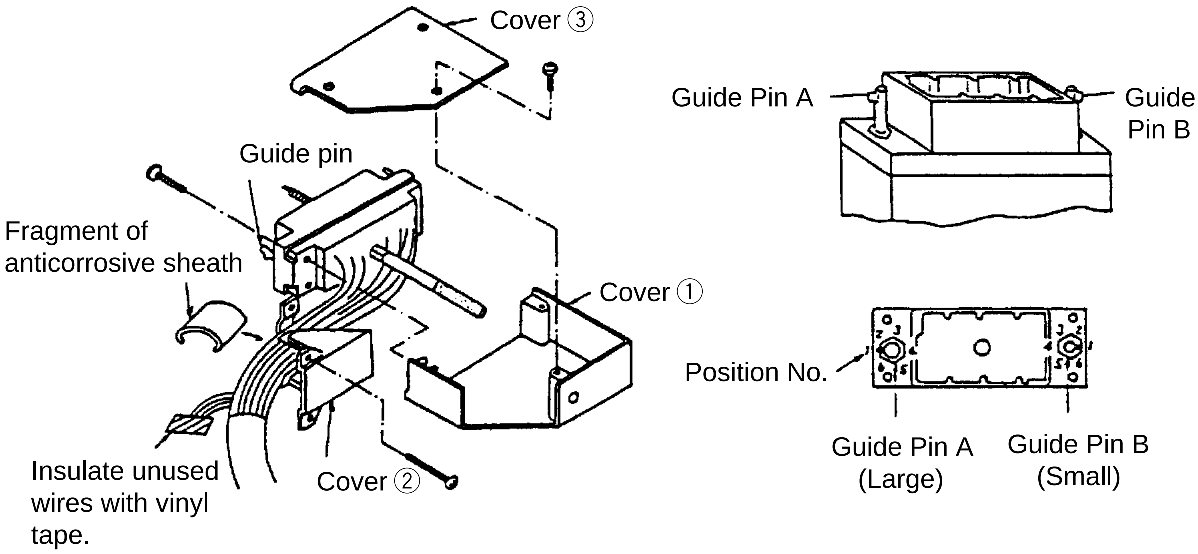

Figure 4-10 How to assemble the 38P connector

Positioning guide pins

The guide pins of the connector identify the mating receptacle. Position them as shown in the table below.

Table 4-2 Guide pins and connector CN-E1

Connector / Guide Pin	CN-E1	Guide Pin Setting Tool
Guide Pin A (Large)	2	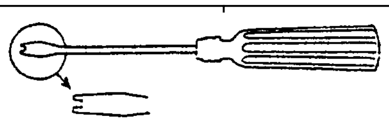
Guide Pin B (Small)	1	Type 10-910-0179-0

Clamping the cable

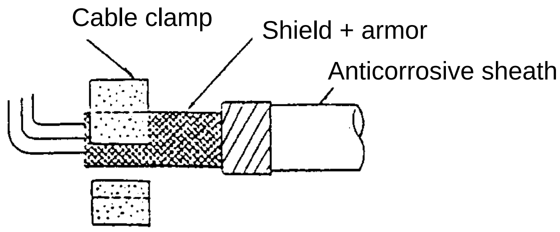

Figure 4-11 Clamping the cable

Fabrication of cable 10S1259 (connected to terminal board TB-E1)

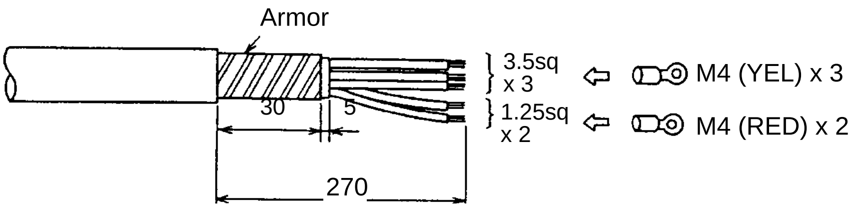

Figure 4-12 Fabrication of cable 10S1259

Fabrication of cable DPYCY-3.5 (connected to terminal board TB-E1)

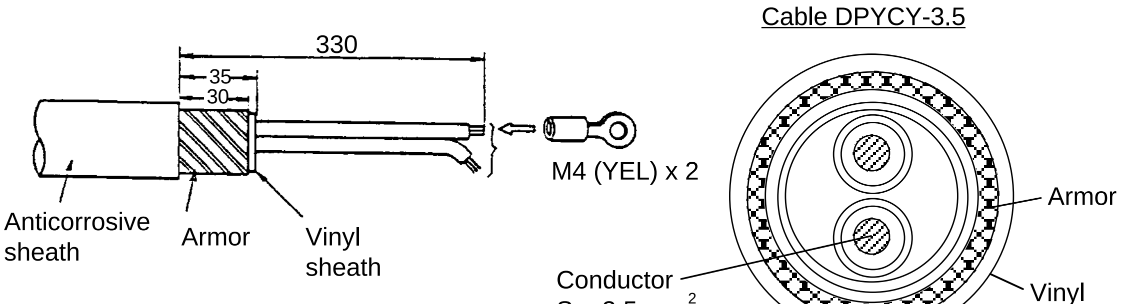

Note: *DPYCY-3.5 is Japan standard cable. Use equivalent cable.*

Figure 4-13 Fabrication of cable DPYCY-3.5

4.6 Cable Fabrication and Connector Assembling in Transmitter Unit

Assembling 38P connector (CN-B2, CN-B3, CN-B4)

Fabrication of cables 10S1258-1, 10S1260

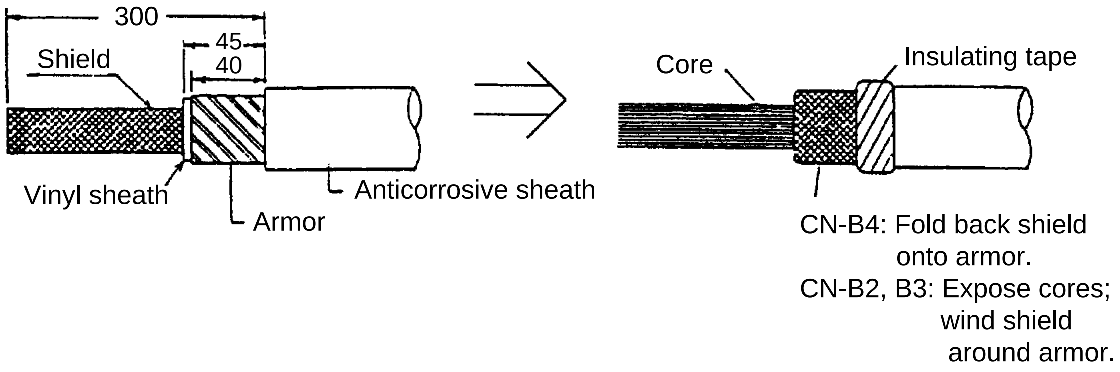

Figure 4-14 Fabrication of cables 10S1258-1, 10S1260

Assembling the 38P connector

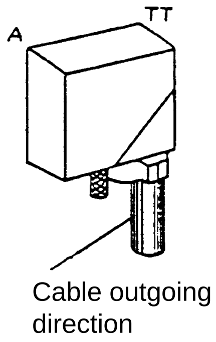

1. Bundle unused wires outside the connector case.
2. Fix the cover ①, noting the cable outgoing direction.
3. Dress the wires and fix the covers ② and ③. Use a fragment of cable sheath to fix the wires at the cable clamp.
4. Shorten unused wires and tape their ends with vinyl tape to prevent short circuit.

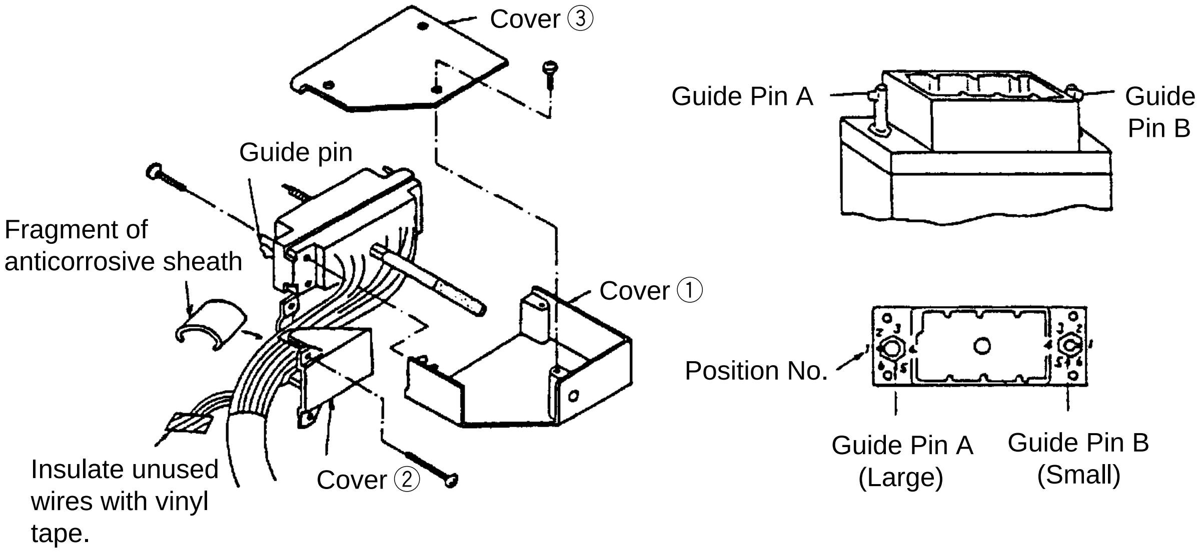

Figure 4-15 How to assemble the 38P connector

Positioning guide pins

Guide pins of the connector are used to identify the mating receptacle. Position them as shown the table below.

Table 4-3 Connectors CN-B2, CN-B3, CN-B4 and guide pins

Connector / Guide Pin	CN-B2	CN-B3	CN-B4	Guide Pin Setting Tool
Guide Pin A (Large)	1	1	3	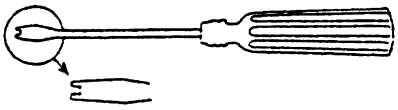 Type 10-910-0179-0
Guide Pin B (Small)	1	1	1	

Clamping the cable

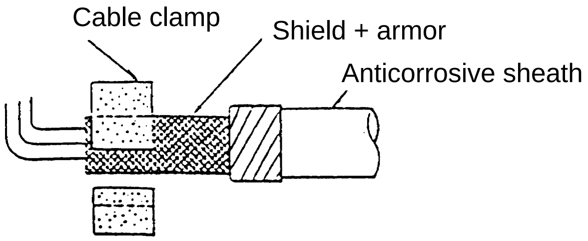

Figure 4-16 Clamping the cable

Fabrication of cable 10S1259 (connected to terminal board TB-B1)

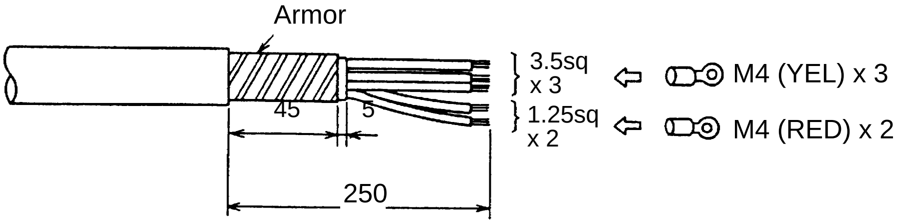

Figure 4-17 Fabrication of cable 10S1259

4.7 Cable Fabrication and Connector Assembling in Hull Unit (incl. receiver unit)

Assembling 38P connector (CN-C1, CN-C3, CN-C4) 20P connector (CN-C2)

Fabrication of cable for 38P and 20P connectors

CN-C1, CN-C3	CN-C2, CN-C4
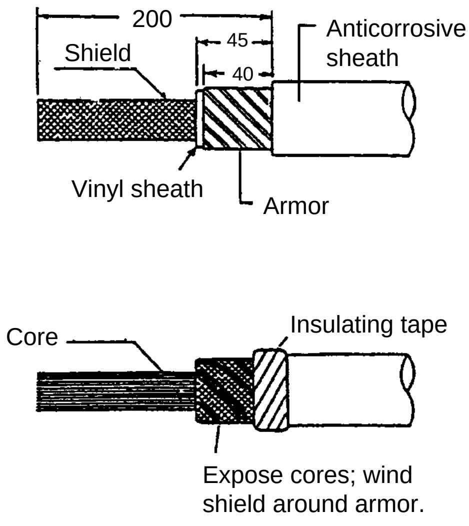	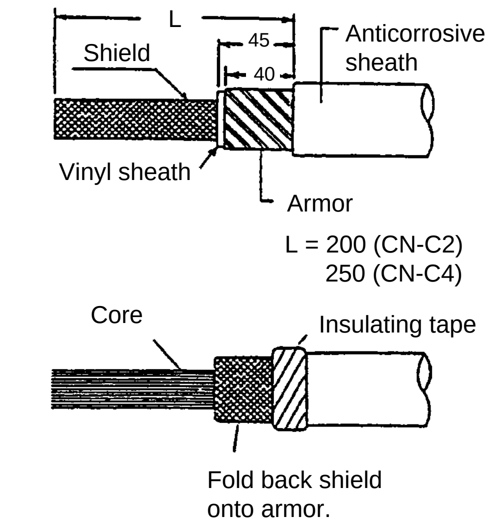

Figure 4-18 Fabrication of cable for 38P and 20P connectors

Assembling the 38P connector

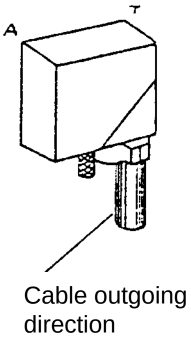

1. Bundle unused wires outside the connector case.
2. Fix the cover ①, noting the cable outgoing direction.
3. Dress the wires and fix the covers ② and ③. Use a fragment of cable sheath to fix the wires at the cable clamp.
4. Shorten unused wires and tape their ends with vinyl tape to prevent short circuit.

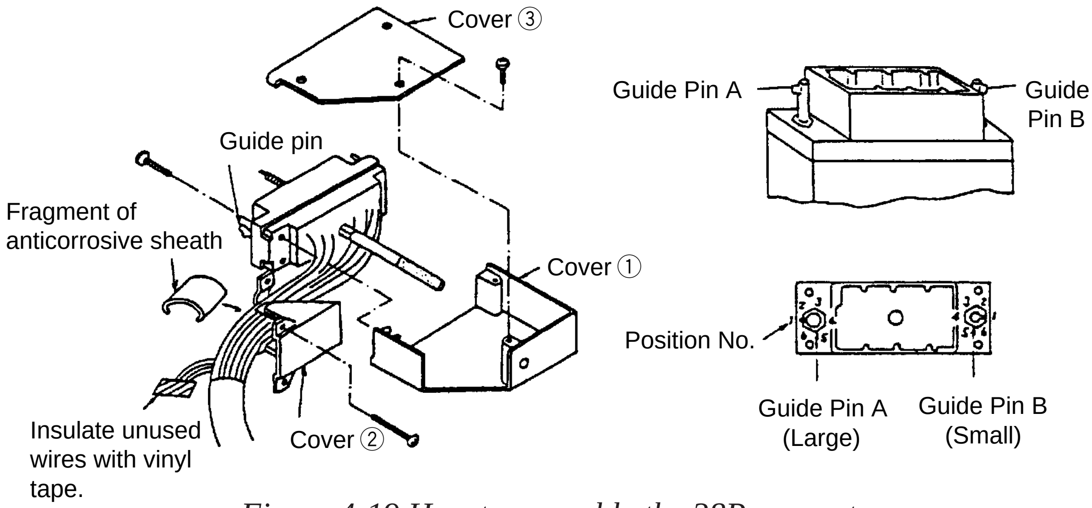

Figure 4-19 How to assemble the 38P connector

Positioning guide pins

The guide pins of the connector identify the mating receptacle. Position them as shown in the table below.

Table 4-4 Connectors CN-C1, CN-C2, CN-C3, CN-C4 and guide pins

Connector / Guide Pin	CN-C1	CN-C2	CN-C3	CN-C4	Guide Pin Setting Tool
Guide Pin A (Large)	2	1	1	3	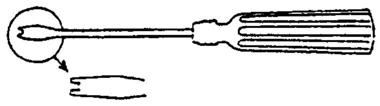 Type 10-910-0179-0
Guide Pin B (Small)	1	1	1	1	

Clamping the cable

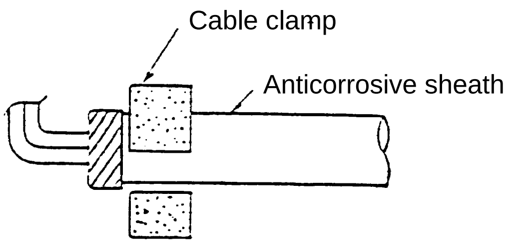

Figure 4-20 Clamping the cable

Fabrication of cable 10S1261 (connected to terminal board TB-D1 in raise/lower control box)

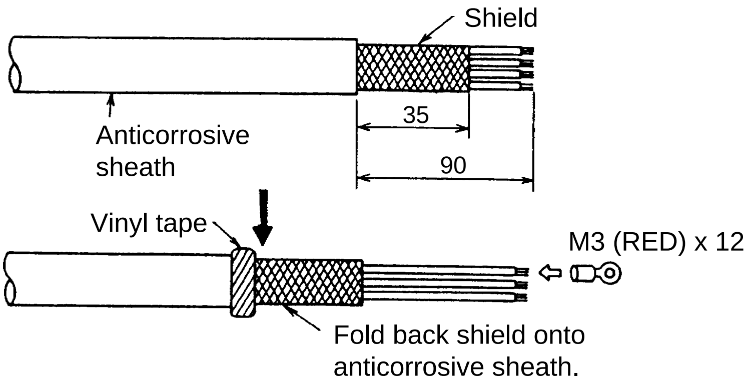

Figure 4-21 Fabrication of cable 10S1261

Fabrication of cable 10S1259 (connected to terminal board TB-D2 in raise/lower control box)

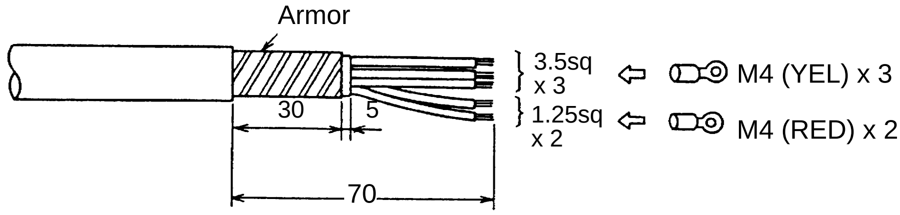

Figure 4-22 Fabrication of cable 10S1259

4.8 Connection of Transducer Cables

The transducer cables come with connectors attached. Plug the connectors into the proper receptacles on the receiver unit, referring to the labels on the cables.

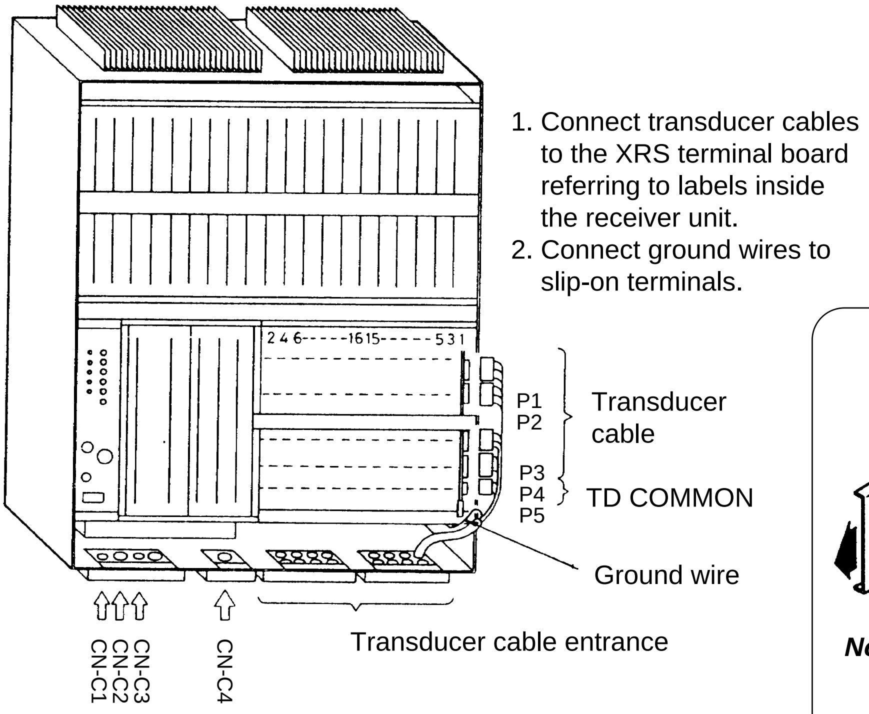

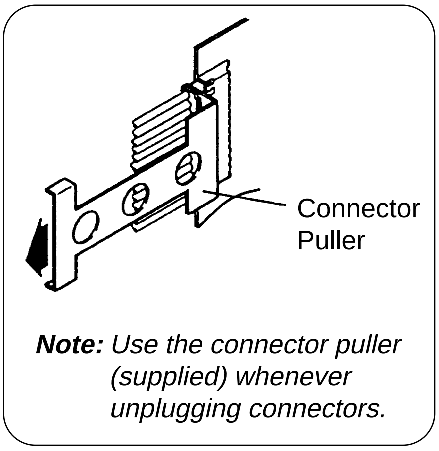

Lead the cables into the receiver unit and clamp them as shown below.

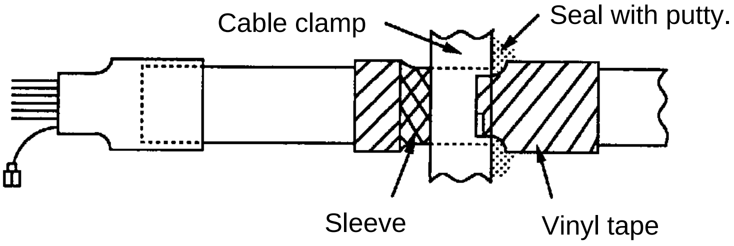

Figure 4-23 Receiver unit, rear view

4.9 Connection of Interface Unit CS-120A

With connection of navigator, the Interface Unit CS-120A and electronic fishing equipment, the function of the CSH-83/84 series is expanded to include true motion presentation, target lock, echo sounder picture, FNZ marker presentation and digital indication of position, water temperature and depth. This chapter provides the information for interfacing the CSH-83/84 series with external equipment.

Connections for true motion and target lock

Heading (digital) and speed (200 pulses/nm) data are required to provide the true motion and target lock functions. Both data are fed to the display unit via Interface Unit CS-120A.

Basically, there are three methods to feed the data:

- Heading data is fed to J205 from A/D Converter AD-100 and the speed pulse data to J206 from the speed log.
- Both heading and speed data are fed to J207 or J204 from the CIF line of the CI-30/50/60.
- NMEA signal is fed to J208 (NMEA port) or J207 (CI/NMEA port).

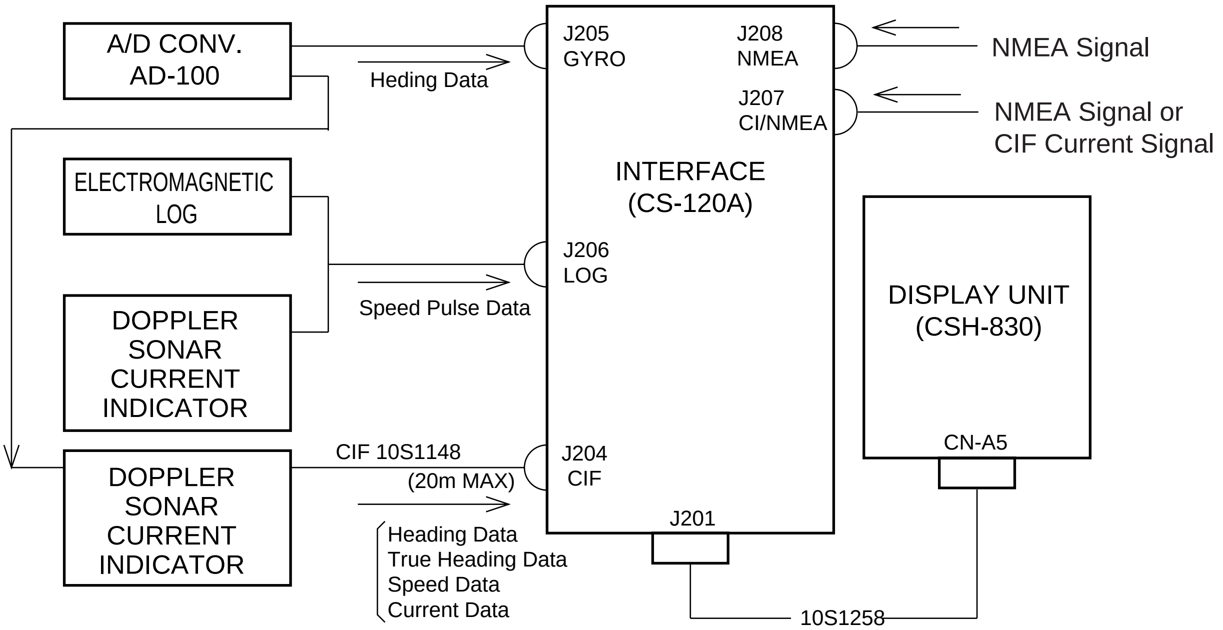

Figure 4-24 Connection of external equipment to Interface Unit CS-120A

Note 1: AD-100 outputs two types of data. 200 ms interval is available.
Note 2: 200 pulses/mile ship's speed data can be taken from a doppler sonar current indicator.

There are six combinations of CIF/NMEA data input.

Combination	NMEA port J208	CIF port J204	CI／NMEA port J207
1	NMEA data	―	NMEA data
2	NMEA data	―	CIF current data
3	―	CIF data	CIF current data
4	NMEA data	―	―
5	―	CIF data	―
6	―	―	NMEA data

Note: NMEA port and CIF port are not fed a data at the same time. Either CIF current data or NMEA data can be fed to CI/NMEA port.

Speed pulse signal

Do not feed Speed pulse data when speed data is fed from NMEA or CIF port and the current indicator is chosen as own ship's navigation data (refer to page 7-5). If they are fed at the same time, the moving distance data will be doubled.

<u>Receivable Data</u>

- Receivable Sentences from NMEA port

  Depth Data：DBT、DPT
  Temperature Data：MTW
  Position fixing Data：GGA、RMC、GLL、RMA
  Speed Data：VTG
  Heading Data：VTG、HDT
  Current Data：VHW、VDR、CUR
  Time Data：ZDA

- Receivable NMEA Sentences from CI/NMEA port

  Same data as NMEA port is received. NMEA port has priority.

- Receivable CIF data from CIF port

  11：Time Data
  21：Dead reckoning Position
  24：Loran C fixing Position
  28：GPS fixing Position
  41：Speed and Heading Data for Dead reckoning
  48：Speed and Heading Data from GPS fixing data
  56：Current indicator　　Data for Display
  66：Current indicator　　Heading, Speed, True Course Data
  76：Current indicator　　ID Number, Depth, Current Direction, Current Speed
  57：Depth Indicator　　Depth, Depth Information
  58：Temperature Indicator　　Temperature, Temperature Information

- Receivable CIF data from CI/NMEA port

  56：Current indicator　　Data for Display
  66：Current indicator　　Heading, Speed, True Course Data
  76：Current indicator　　ID Number, Depth, Current Direction, Current Speed

Connections for ES picture and FNZ markers

To provide echo sounder picture and FNZ markers, connect echo sounder to J203 and net sonde to J202. The signals applied to J202 and J203 are

J202: Net sonde signal and trigger signal (keying pulse of echo sounder). A white line signal from an echo sounder may be additionally applied as described on the next page if the digital depth data is not available on J204.

J203: Echo signal and keying pulse from an echo sounder.

Connection 1: Displaying echo sounder picture

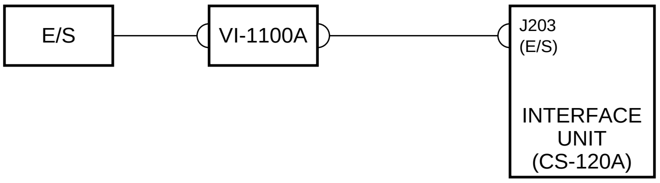

Connection 2: Displaying echo sounder picture and FNZ markers by one echo sounder

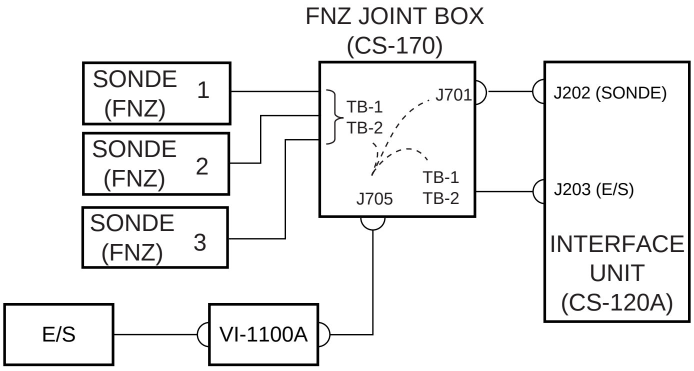

This method is used when the net sonde is installed and both echo sounder and net sonde signals are taken from the same echo sounder. The net sonde signal is applied to both J202 and J203.

Connection 3: Displaying echo sounder picture and FNZ markers by separate echo sounders

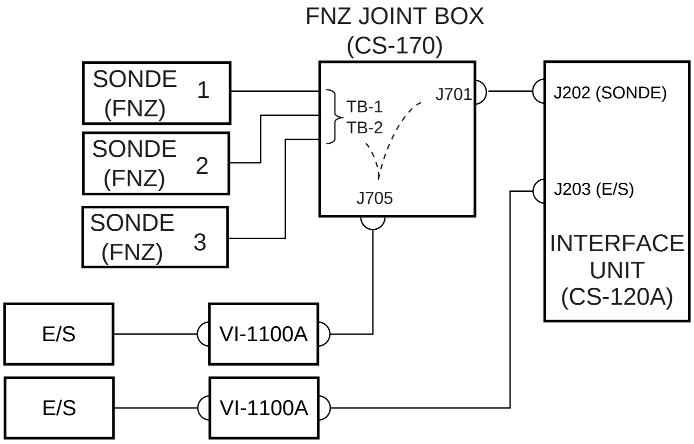

Connections for digital indication of position, water temperature and depth

The data for these readouts are taken from the equipment shown in the table below and input to J208 or J204. Input to J208 if the data is NMEA format, or to J204 if the data is CIF format.

Data	Data Source
Position	Loran C navigator, GPS navigator
Water Temperature	Temperature Indicator T-2000/TI-20, nav equipment or color video sounder connected to temperature sensor
Depth	Color video sounder

Note: When a sounder which has digital depth data output is not available, the white line signal of a paper recording echo sounder can be used to provide digital depth readout. Connect the echo sounder as shown below or as shown in connection 2 or 3 on previous pages and operate the echo sounder front panel controls so that the white line is effected on the seabed contour.

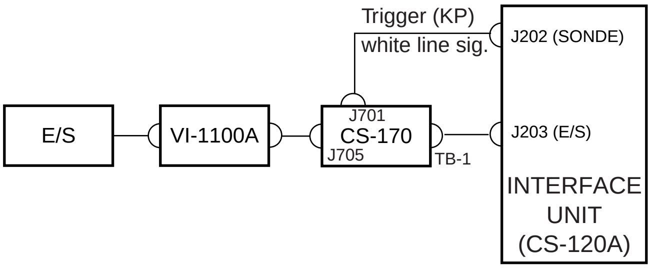

Wiring

Connect referring to the Interconnection Diagram at the back of this manual.

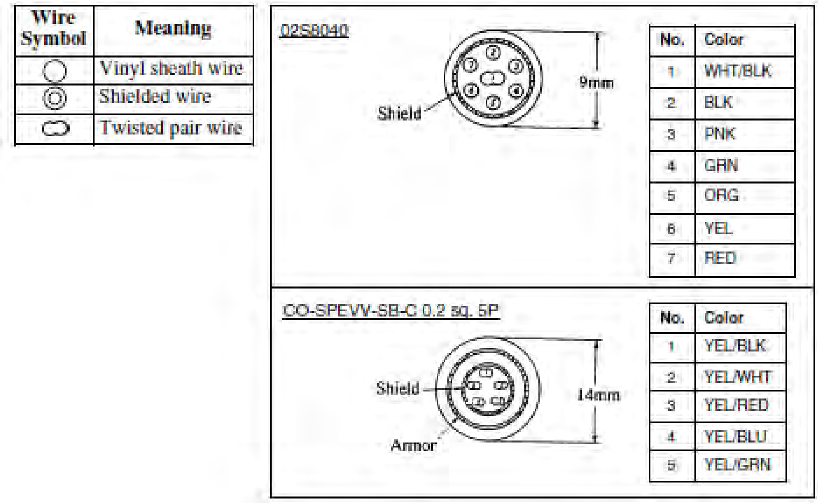

Assembling 10P and 7P connectors

10P Connector (SRCN6A16-10P)	J202 (FNZ), J204 (CIF), J205 (GYRO), J207 (CI)

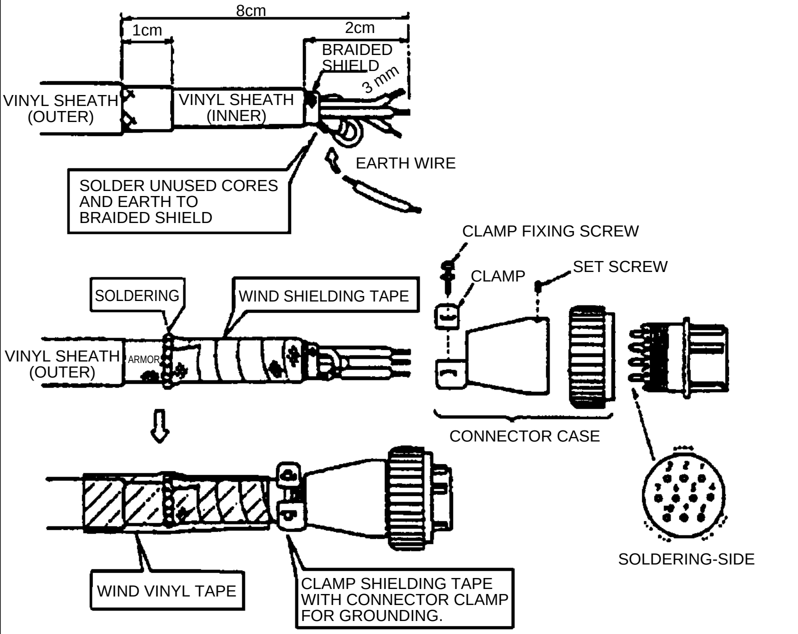

7P Connector (SRCN6A16-7P)	J203 (E/S)

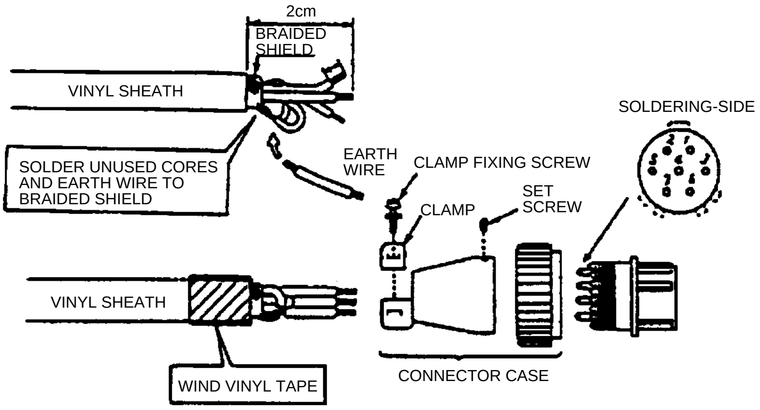

Figure 4-30 Assembling 10P and 7P connectors

4.10 Connection of Sub-Display Unit (option)

The Sub-Display Unit CSH-236 controls the sonar from a remote location, and its outline dimensions and control panel layout are identical to the display unit. One sub-display unit can be connected to three display units.

Note: The Sab-Display Unit can be connected to CSH-83 only.

Connections

Refer to the interconnection diagram on page S-1 and the connector assembling/cable fabrication procedure on page 4-4.

Note: A sub-display unit may not be connected to different models (for example, CSH-73 and CSH-24).

DIP switch setting

Set DIP switch S1 on RDCB board 10P6724 in the sub-display unit referring to the figure and table below.

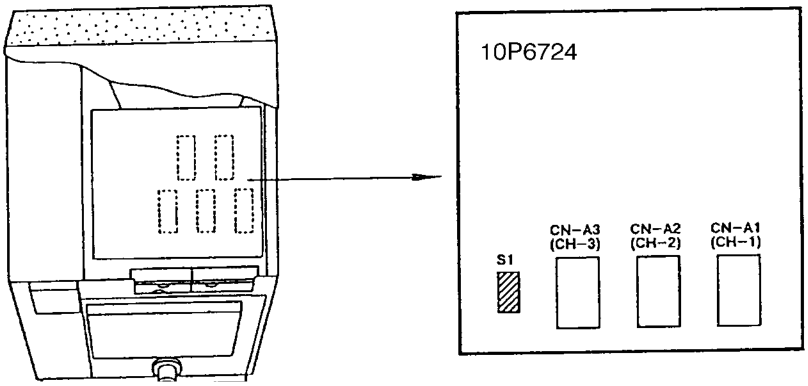

Figure 4-31 Sub-display unit, cover opened

Table 4-6 DIP switch S1 setting on RDCB board

SW No.	Used for	Description
1 2 3	Display unit on CH-1 Display unit on CH-2 Display unit on CH-3	ON: Turning on the sub-display unit automatically turns on the display unit.
4 5 6	Display unit on CH-1 Display unit on CH-2 Display unit on CH-3	ON: Turning on the display unit automatically turns on the sub-display unit. OFF: Sub-display unit is turned on.
7	Remote ON/OFF	Used in remote display unit. Set to ON in sub-display unit.
8	Not used	

Note: You may wish to have both the display unit and a sub-display unit turn on when one is turned on. To do this turn on both #1 and #4.

4.11 Connection of Remote Display Unit (option)

Three display units may be connected to one remote display unit. Operating controls provided on the remote display are power on/off switch, brilliance control and channel selector, which selects a display unit.

Note: The Remote-Display Unit can be connected to CSH-83 only.

Connections

Refer to interconnection diagram on page S-1 and cable fabrication/connector assembling procedure on page 4-11.

Note: The display unit has two ports: one for sub-display unit and the other for remote display unit. When there is no sub-display unit, both ports can be connected to remote display units.

Set DIP switch S1 on RDCB board 10P6724 in the remote display unit referring to the table and figure below.

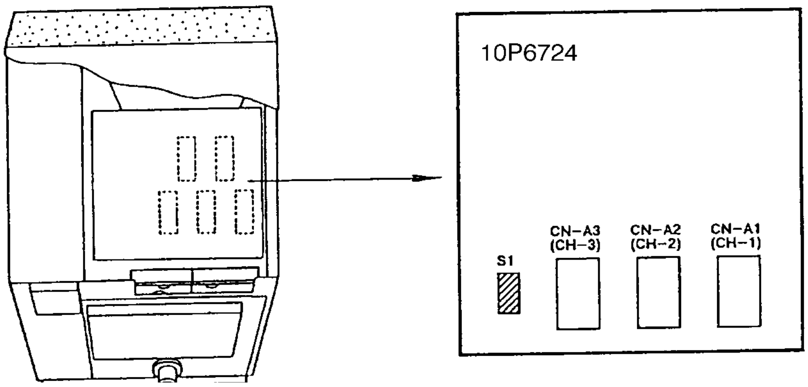

Figure 4-32 Remote display unit, cover opened

Table 4-7 DIP switch S1 setting on the remote display unit

SW No.	Used for	Description
1 2 3	Display unit on CH-1 Display unit on CH-2 Display unit on CH-3	Not used.
4 5 6	Display unit on CH-1 Display unit on CH-2 Display unit on CH-3	Turn on when display unit is connected; turn OFF when not connected.
7	Remote ON/OFF	ON: Remote display unit turns on when a display unit is turned on. Remote display turns off when all display units are turned off. OFF: Remote display is turned on/off by its ON/OFF switch. **Note:** The remote display cannot be turned on unless a display unit is turned on.
8	Not used	

4.12 Synchronizing Transmission with Other Sonars or Echo Sounders

You may synchronize transmission with other sonars or echo sounders.

Connections

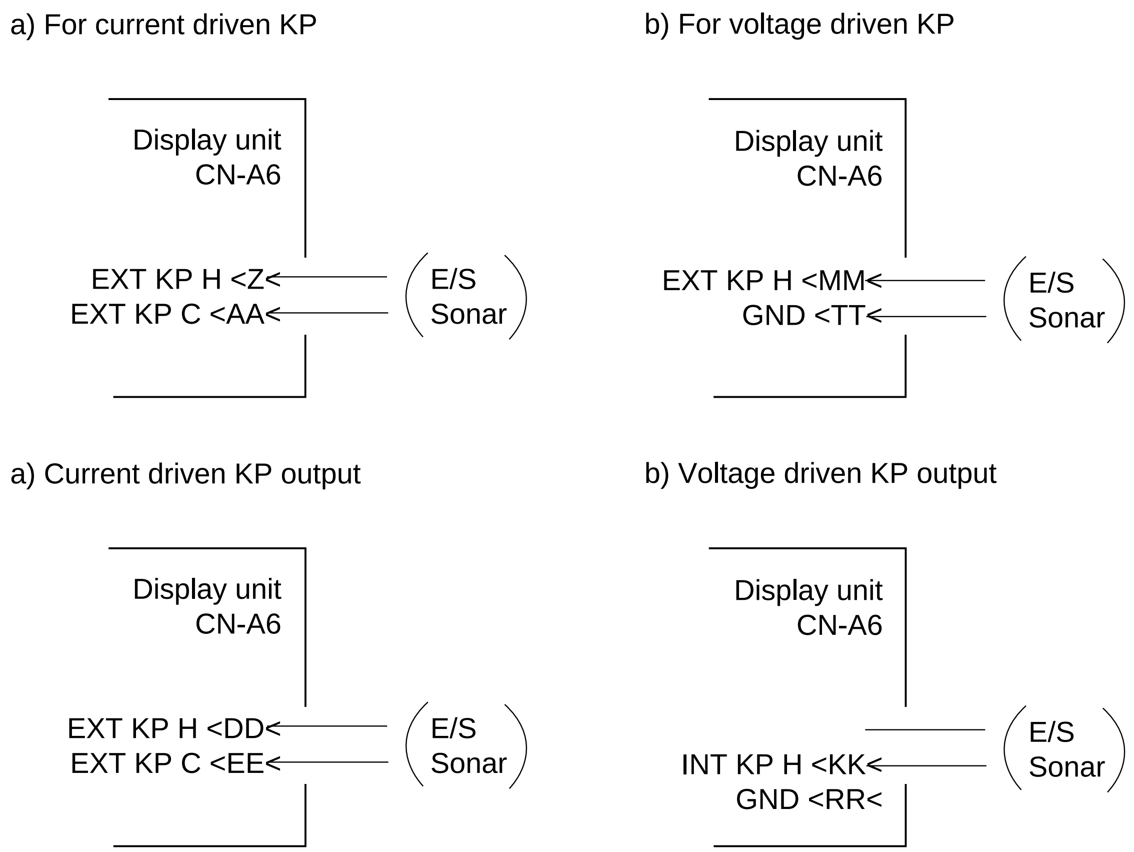

Figure 4-33 Connections for synchronizing transmission with other sonars or echo sounders

Menu setting

Set polarity of the KP on the INIT/SET menu. Set transmission cycle to “0” on data setting window. Refer to the operator’s manual for further details.

4.13 Interlocking Operation with Other Sonars

Functions (range, tilt, fish marks, etc.) and remote control may be mutually interlocked with those on other sonars (CSH-23/24/73/83/84). For example, if the range is interlocked, changing the range in one sonar automatically sets the other sonar to the same range. The functions to be interlocked can be selected on the SYSTEM menu. See the operator's manual for further details.

Connections for interlocking functions

Two sonars

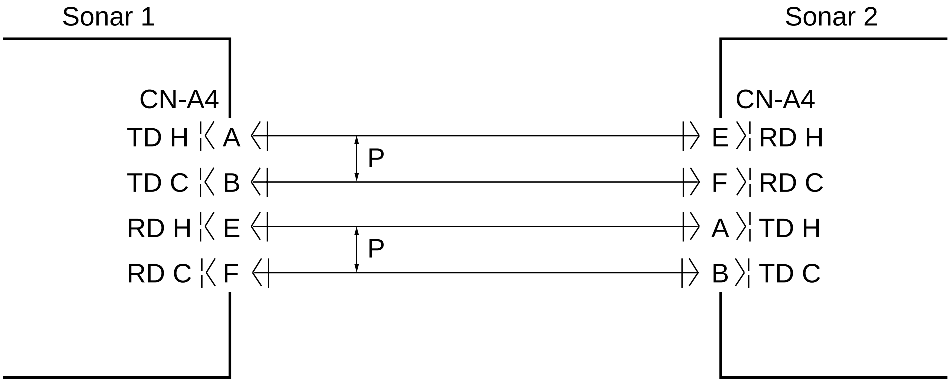

Figure 4-34 Connections for interlocking two sonars

Three sonars

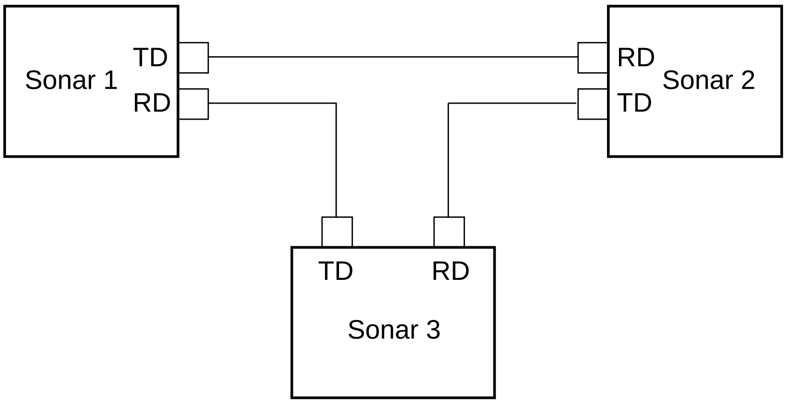

Figure 4-35 Connections for interlocking three sonars

DIP switch setting

Set ID code with DIP switches #1 thru #3 on the display unit. Any code is acceptable, provided that it is not the same as that set on the other sonar. For how to access the DIP switches see page 7-3.

Connections for interlocking remote control

A single remote control box can control three display units. Connect it to the display units as shown below.

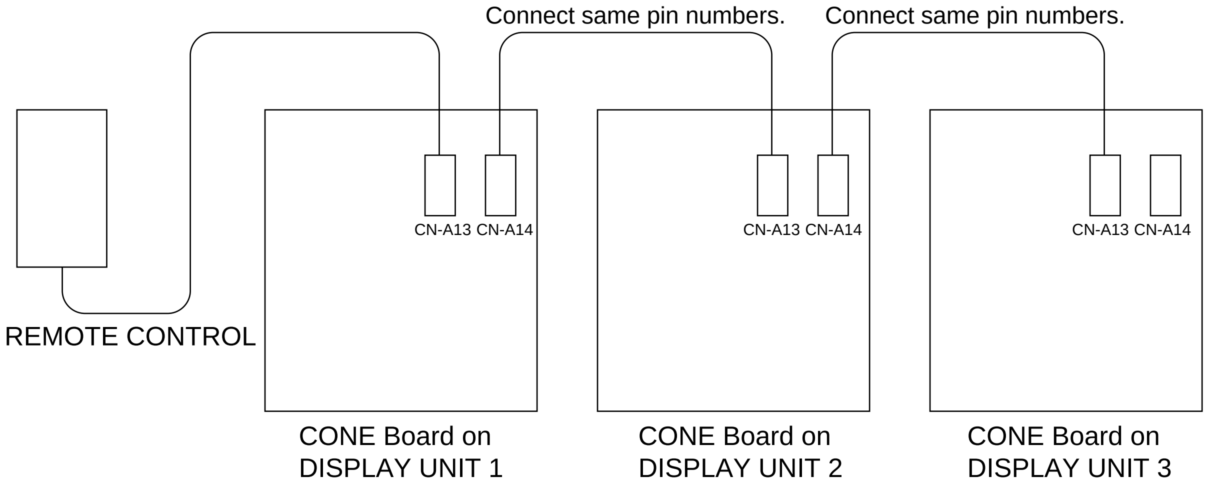

Figure 4-36 Connections for remote control of multiple display units

5. CHANGING POWER SPECIFICATIONS

The display unit is set at the factory for connection to ship's mains of 100 VAC. To power it by 110 VAC or 220 VAC, use step-down transformer PT-400, change the transformer taps on the power unit as below and connect the ship's mains directly.

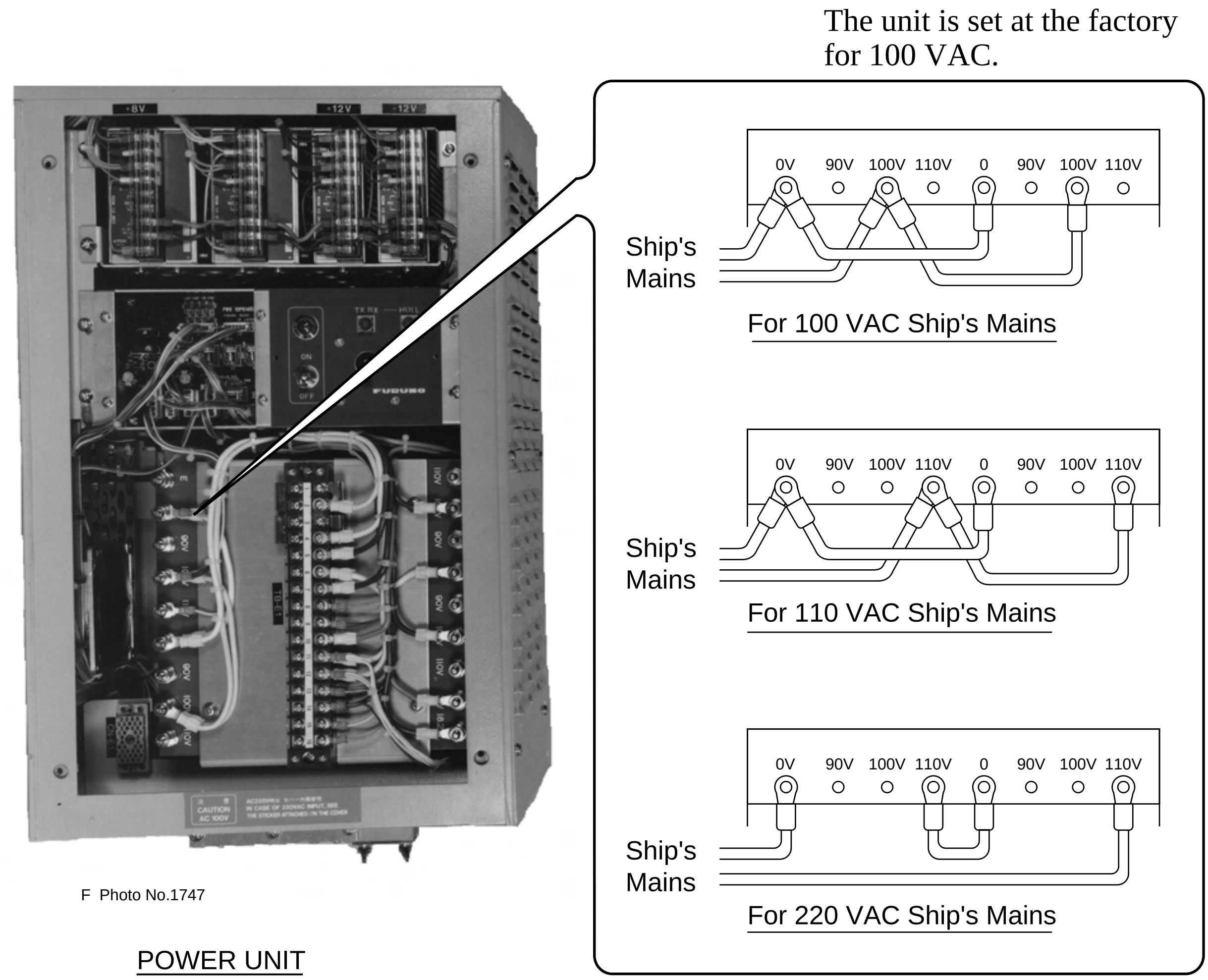

Figure 5-1 Changing tap connections on the power unit

6. INSTALLATION OF FRP RETRACTION TANK

6.1 Before Beginning the Installation

Note the following before installing the FRP tank:

- Use only the tank supplied.
- Follow the instructions in this chapter.
- If the owner of the equipment elects to use a shipyard-prepared FRP tank, FURUNO will assume no responsibility for any damage caused by water leakage. If the shipyard supplies the FRP tank, do the following:
    - The finished surface of the tank flange must be within 0.5 mm of horizontal.
    - Use sealant recommended by shipyard.

Table 6-1 Contents of FRP retraction tank installation kit

Name	Type	Code No.	Qty
FRP Retraction Tank	SHG-0001	660-800-011	1
Waterproofing Gasket	SHH-0003-1	660-800-031	1
Three Bond Sealant	1101 200 g	000-854-101	1

6.2 Installation of the FRP Retraction Tank

Fasten the hull unit to the retraction (after installing the retraction tank) as follows.

1. Clean the surface of the tank flange. Coat the flange with about 1 mm thickness of sealant (Three Bond 1101, supplied).

   Note: Use only the sealant supplied.

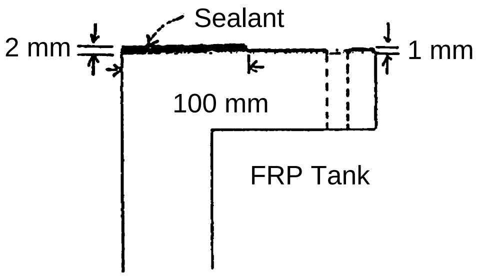

Figure 6-1 Coating the tank flange with sealant (supplied)

2. Lay the waterproofing gasket on the tank flange and coat the gasket with about 1 mm thickness of sealant.

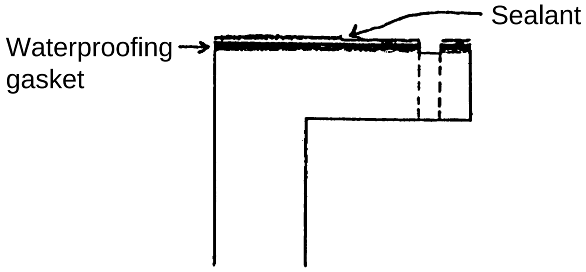

Figure 6-2 Laying the waterproofing gasket on the tank flange

3. Orient the bow mark (arrow) on the hull unit flange toward ship's bow. (If the mark cannot be perfectly oriented toward ship's bow adjust heading after installation as shown in the next chapter.)

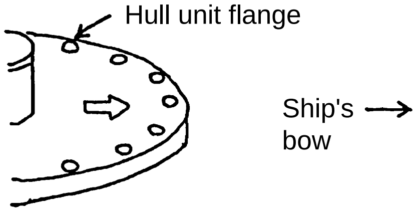

Figure 6-3 Orienting hull unit flange toward ship's bow

4. For the 1200 mm stroke hull unit, insert insulation gaskets in each of the 11 holes for stud bolts on the tank flange. (Do this before setting the hull unit to the retraction tank.)

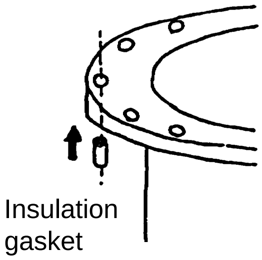

Figure 6-4 Inserting insulation gasket in tank flange

5. Before setting the hull unit on top of the retraction tank, observe the following cautions:
   - Clean the hull unit flange to make sure no foreign material has fallen into the retraction tank.
   - Confirm that waterproofing gasket is in place.

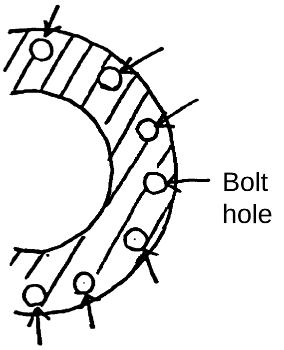

Figure 6-5 Tank flange

6. Set the hull unit on top of the retraction tank. Pass flat washer onto hex bolt and insert them in stud bolt hole from the top of the hull unit flange. At the retraction tank, fasten the bolt with insulation gasket, flat washer, spring washer and nut, in the order shown in the figure below.

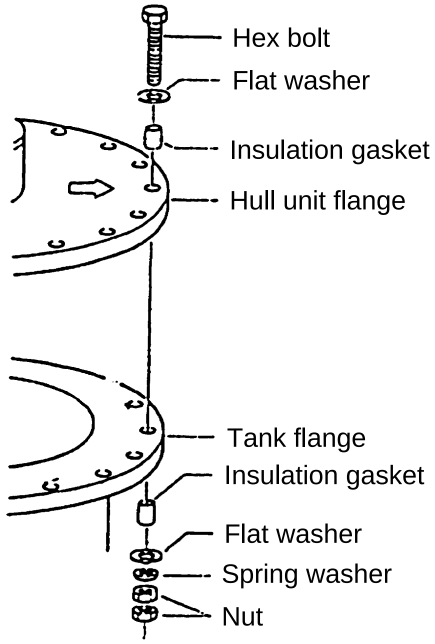

Figure 6-6 Fastening the hull unit to the retraction tank

7. Install stays from the top of the hull unit, using the eye bolts.

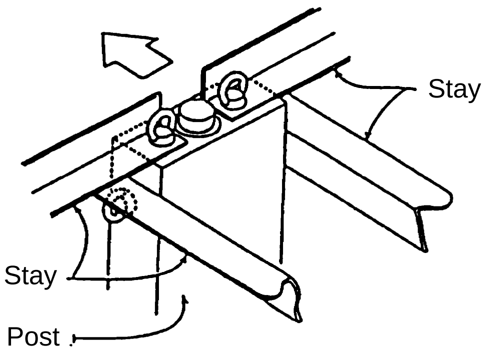

Figure 6-7 Installing stays on the hull unit

7. ADJUSTMENT AND CHECK

7.1 Hull Unit Check

1. Press the ON switch to turn on the equipment. Confirm that the lamps above the ON and ⬆ switches light.

2. Confirm that the 5V and UP lamps on the raise/lower control box are lit.

3. Remove the cover of the raise/lower control box and check the following voltages:

Terminal	Terminal No.	Voltage
TB-D1	⑦ – ⑧	+12 V
TB-D2	① – ② ② – ③ ① – ③	100 VAC 100 VAC 200 VAC

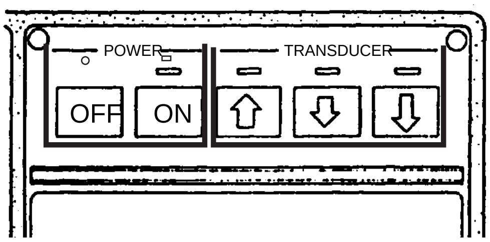

Figure 7-1 Display unit front panel

4. In the raise/lower control box, turn the TEST/NORMAL switch to TEST. Press the ⬇ switch to confirm that the transducer lowers. Also, while the transducer is being lowered, check that the MD LED lights when the MD L. SW kicks. Note that the MD L. SW does not stop the transducer when the TEST/NORMAL switch is in the TEST position.

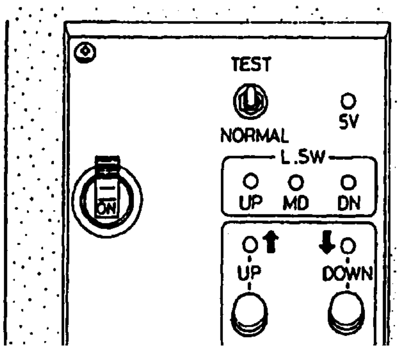

Figure 7-2 Raise/Lower control box

5. Press and release the ⬇ switch. Confirm that the transducer stops at the moment the switch is released.

6. Press the ⬇ switch again. Confirm that the transducer stops at the moment the lower limit switch kicks.

7. Confirm that the ⬆ switch operates in a similar manner.

8. Check that LEDs on the panel of the raise/lower control box light as follows:

   1) UP, MD and DN LEDs light when corresponding limit switch kicks.
   2) UP and DOWN LEDs light while UP and DOWN switches are pressed and extinguish when switches are released.

9. Set the TEST/NORMAL switch to NORMAL.

10. At the display unit, press the ⬇ (mid position) switch. Confirm that the lamp above the switch blinks while the transducer is being lowered, a short beep sounds when the mid limit switch kicks, and the lamp lights when the transducer is fully lowered.

11. Press the ⬇ switch. Confirm that the lamp above the switch blinks while the transducer is being lowered, a short beep sounds when the mid limit switch kicks, and the lamp lights when the transducer is fully lowered.

12. Press the ⬆ switch. Confirm that the lamp above the switch blinks while the transducer is being raised, a short beep sounds when the mid limit switch kicks, and the lamp lights when the transducer is fully raised.

13. Press the OFF switch. Confirm that the transducer is completely retracted and then the power is turned off.

14. With the transducer lowered, confirm that the transducer is raised when ⬆ or OFF is pressed.

7.2 Heading Adjustment

When the arrow on the flange of the hull unit cannot be directed toward ship’s bow adjust the heading so an echo which is dead ahead appears dead ahead on the display.

1. Locate a target in the bow direction (buoy, for example) and display it on a near range. If the target appears at 12 o’clock the heading alignment is correct and no further adjustment is necessary. If it is not go to step 2.

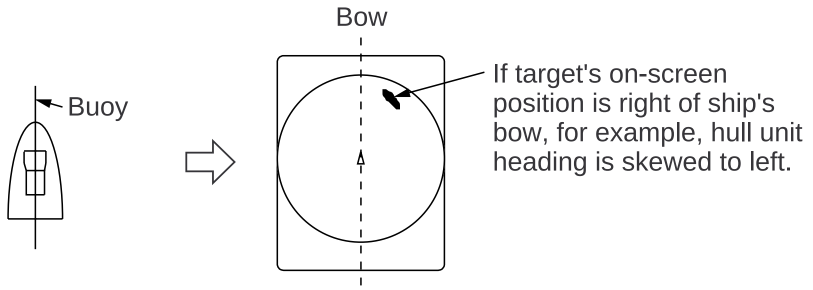

Figure 7-3 Heading adjustment

2. Turn on the power while pressing and holding down the MENU key. The INIT SET/TEST menu appears.

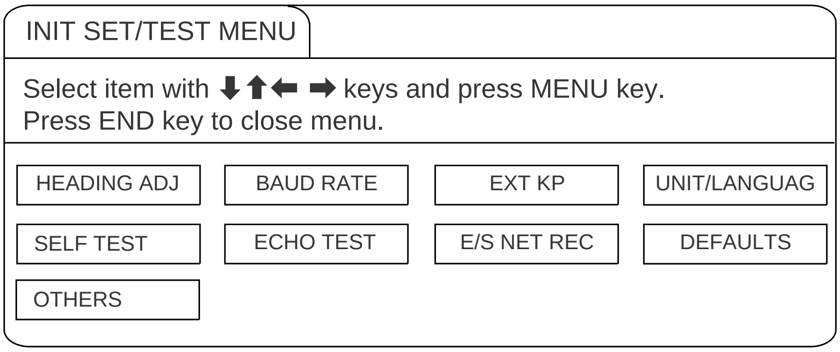

Figure 7-4 INIT SET/TEST menu

3. Select HEADING ADJ.

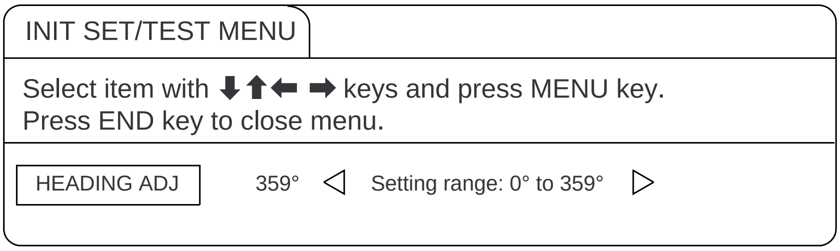

Figure 7-5 HEADING ADJ menu

4. Enter heading correction with ⬅ or ➡, referring to the example in the table below for guidance.

Target Location	Correction Setting
Target displaced 30° to port	Set to 30°.
Target displaced 30° to starboard	Set to 330°.

7.3 DIP Switch Setting in the Display Unit

Set the DIP switch in display unit, referring to the table shown below.

1. Unfasten six screws on the main panel.

2. Draw out the main panel and unplug four connectors.

3. Set DIP switch referring to the table below.

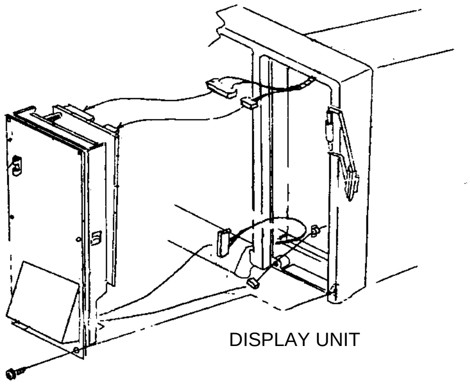

Figure 7-6 Dismounting the main panel

DSW Board (10P6722F)

Item	SW No.	Setting				
ID Code for Interlock Function	1	Set ID code for interlock operation of CSH-23/24/73/83/84 sonar. Any code is acceptable unless it is used in other interlocked sonars.				
	2					
	3					
Unit Code	4	OFF	ON	ON	OFF	ON
	5	OFF	OFF	ON	OFF	ON
	6	OFF	OFF	OFF	ON	ON
	Unit	CSH-58 (28 kHz) CSH-53 (28 kHz)	CSH-53 (55 kHz)	CSH-23/24	CSH-73/ 83/84	CSH-23F/23FL/ 24F/24FL
EEPROM Check	7	ON	Check OFF	OFF	Check ON	
Stand Alone	8	For factory use. Set to ON always.				

PND Board (10P6714)

Item	SW No.	Setting	
Display unit setting	3*	OFF	For 21” CRT display unit (CSH-24/24F/24FL/84)
		ON	For 15” CRT display unit (CSH-23F/23FL/24F/24FL)

*: Set to OFF for the Processor unit.

7.4 Setting and Adjustment of the Interface Unit CS-120A

DIP switch setting

Navigation data and fishing data input from external equipment can be turned on or off by DIP switches DP-1 and DP-2 on CPU II board 10P6871 in the Interface Unit CS-120A.

DP-2

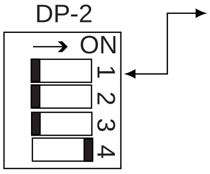

Standard Setting

CI/NMEA port Input format

Input format	S1
CIF (Factory Setting)	OFF
NMEA	ON

Changed the register R78 (47Ω) to 470Ω on pcb 10P0047 when NMEA is selected.
- -NMEA: 470Ω
- -CIF: 47Ω

Interface board (10P0047)

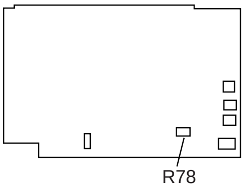

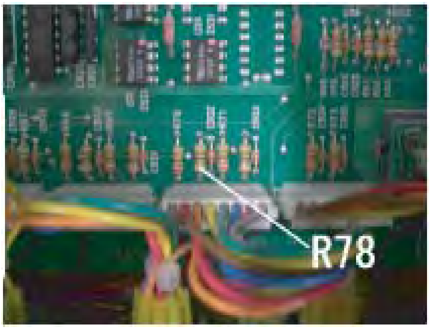

DP-1

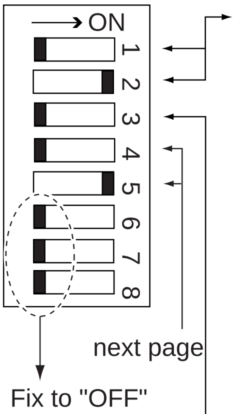

Own ship's navigation data (Gyrocompass, Speed log or Current indicator etc.)

Input Device	S1	S2
Gyrocompass, Sppeed log	OFF	OFF
GPS or DR *1	ON	OFF
Current indicator	OFF	ON
Gyrocompass, GPS *2	ON	ON

Select navigation device which feeds navigation data for drawing ship's track by S1 and S2.

*1: GPS ship's speed/heading data from NMEA or CIF line, or dead reckoning speed/ heading data are used. Take care that heading data may have error if the speed is lower than 0.2 kts.

*2: Courseline is plotted by using CIF or NMEA format speed data and Gyrocompass data. Speed log is set by using GPS or Current Indicator.

Latitude/Longitude

Input Device	S3
Loran C	OFF
GPS or DR *	ON

Own ship's position data is selected with S3.

*: Data from GPS or DR is used (GPS has priority).

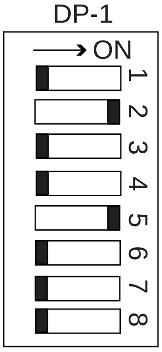

Talker check (only for NMEA signal)

	S4
Talker is checked.	OFF
Talker is not checked.	ON

Talker of GP, SD, VD, etc. is checked.

Depth (Echo sounder, Color Video Sounder, etc.)

Input Device	S5
Echo Sounder *	OFF
CIF or NMEA line	ON

Depth data is selected with S5.

*: Use this position for white line pulse when the depth data is taken from an echo sounder. However late model FURUNO echo sounders do not output white line pulse. Normally set to ON.

Interface unit (10P0047) adjustment

If the E/S picture on the screen does not have the desired coloration, perform the adjustment as follows with the preset potentiometers on the I/O board in the interface unit.

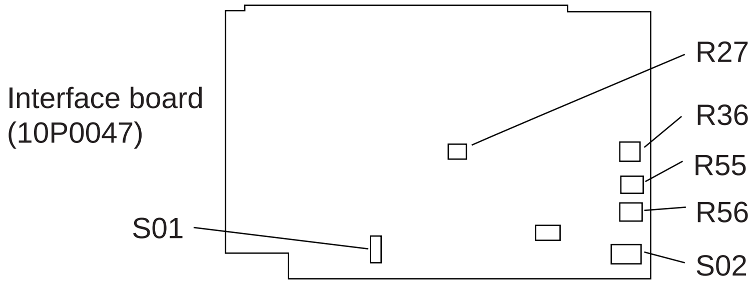

Setting for DIP switch

S01:

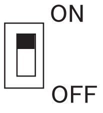

The FNZ marker is plotted on the echo sounder picture with this switch turned on when FNZ marker signal is fed to External Interface. Factory setting is the “ON” position.

S02:

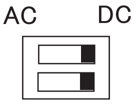

Selects the signal mode (AC or DC) according to the combined echo sounder connected. Factory setting is the “AC” position.

Adjustment of signal level (R36, R56)

1. Set the MODE switch to E/S.
2. Turn the potentiometer R36 to suppress a noise, and the potentiometer R56 so that the color gradation of the E/S picture on the screen appears similar to the intensity gradation of the combined E/S echogram.

Adjustment of white line inhibit time (R27)

In case digital depth data is not combined with the CS-120A, the white line signal from the echo sounder is used for depth information. Potentiometer R27 cancels the white line pulse for about 10 ms after transmission to avoid false depth indication caused by unwanted noise in short ranges. Readjustment of potentiometer R27 is not required as long as CSH-83/84 series indicates the correct depth. If does not, however turn R27 to the right.

Adjustment of white line output level (R55)

Improper setting of potentiometer R55 causes the seabed line to be painted in deep blue due to the white line pulse. Adjust it so that the seabed line is painted in same color as seabed.

Priority for data

The priority between ports, the category of data or formats is as follows. “1” has the highest priority.

Basic priority

1. NMEA data > CIF data
2. NMEA data: NMEA port data > CI/NMEA port data
3. CIF data: CI/NMEA port data > CIF port data

Heading priority

1. Heading data from GYRO port
2. GP-HDT from NMEA port (GP-HDT: HDT sentence with talker GP)
3. GP-HDT from CI/NMEA port
4. VD-VHW from NMEA port
5. VD-VHW from CI/NMEA port
6. VD-CUR from NMEA port
7. VD-CUR from CI/NMEA
8. CIF signal <66> from CI/NMEA port
9. CIF signal <66> from CIF port

GPS fixing position priority

Latitude and Longitude are set to GPS/DR with S3 on the DIP switch DP-1.

1. GP-GGA from NMEA port
2. GP-GGA from CI/NMEA port
3. GP-RMC from NMEA port
4. GP-RMC from CI/NMEA port
5. GP-GLL from NMEA port
6. GP-GLL from CI/NMEA port
7. <28> from CIF port

LC fixing position priority

Latitude and Longitude are set to LC with S3 on the DIP switch DP-1.

1. LC-RMA from NMEA
2. LC-RMA from CI/NMEA
3. <24> from CIF port

Depth priority

Depth is set to CIF/NMEA with S5 on the DIP switch DP-1.

1. SD-DPT from NMEA port
2. SD-DPT from CI/NMEA port
3. SD-DBT from NMEA port
4. SD-DBT from CI/NMEA port
5. <57> from CIF port

Ship's movement data priority (data from GPS/DR)

Ship's movement data is set to GPS·DR with S1/S2 on the DIP switch DP-1

1. GP-VTC from NMEA port
2. GP-VTC from CI/NMEA port
3. GP-RMC from NMEA port
4. GP-RMC from CI/NMEA port
5. <48> from CIF port
6. <41> from CIF port

Ship's movement data priority (data from Current indicator)

Ship's movement data is set to Current indicator with S1/S2 on the DIP switch DP-1

1. VD-VTG from NMEA port
2. VD-VTG from CI/NMEA port
3. VD-VHW from NMEA port
4. VD-VHW from CI/NMEA port
5. CIF signal <66> from CI/NMEA port
6. <66> from CIF port

Ship's movement data priority (data from Gyro/Navigation)

Ship's movement data is set to Gyrocompass/navigation with S1/S2 on the DIP switch DP-1.

1. GP-VTG from NMEA port
2. GP-VTG from CI/NMEA port
3. GP-RMC from NMEA port
4. GP-RMC from CI/NMEA port
5. LC-VTG NMEA port
6. LC-VTG from CI/NMEA port
7. LC-RMA from NMEA port
8. LC-RMA from CI/NMEA port
9. <48> from CIF port
10. <44> from CIF port

Current data (multi layer) priority

1. VD-CUR from NMEA port
2. VD-CUR from CI/NMEA port
3. CIF signal <76> from CI/NMEA port
4. <76> from CIF port

Current data (single layer) priority

1. VD-VDR from NMEA port
2. VD-VDR from CI/NMEA port
3. CIF signal <56> from CI/NMEA port
4. <56> from CIF port

8. WHEN SHIP’S MAINS IS 24 VDC

When the ship’s mains is 24 VDC, use DC/AC inverter unit TR-2435, TR-24100 and current limiter box CSH-1400. (All units are optional supply.) The system diagram and interconnection diagram are as follows.

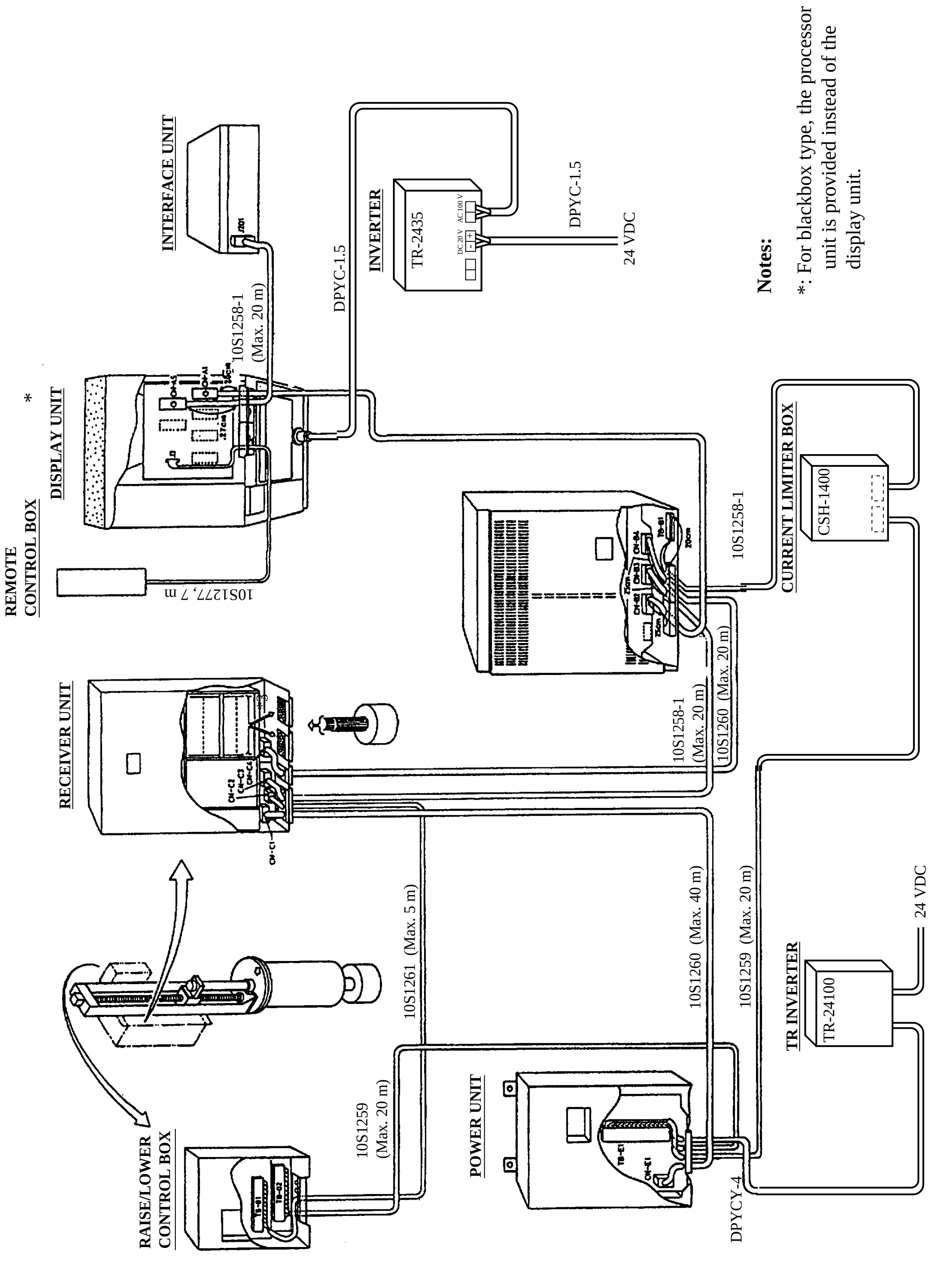

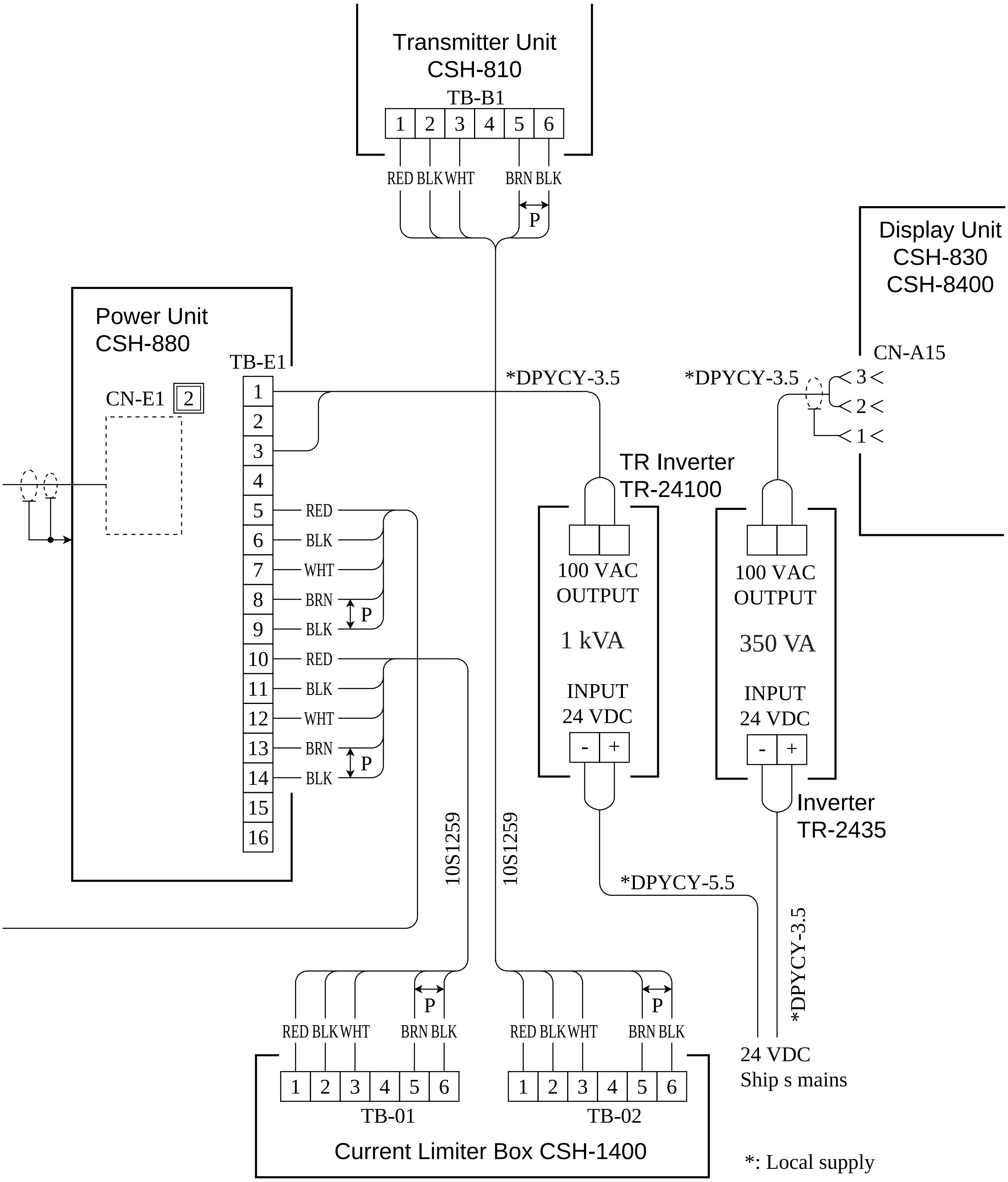

Figure 8-2 Connection with 24 VDC ship's mains

9. PROCESSOR UNIT CSH-835 (BLACKBOX TYPE FOR CSH-83)

9.1 Installing the Unit

When selecting a mounting location, consider the following conditions:

- Place where operating personnel are able to control the unit easily while observing the fishing ground or the area surrounding the vessel.
- Place not exposed to direct sunlight, water splashes or hot air.
- Place where maintenance and ventilation clearance shown in the outline drawings is ensured.
- Observe the compass safe distances shown on page i to prevent interference to a magnetic compass.

Mounting procedure

1. Remove the mounting base by unscrewing the two bolts at the front bottom.
2. Fix the mounting base to the table or deck by using six self-tapping screws 6x20 (supplied).
3. Place the unit on the mounting base, slide it forward and then fasten it to the mounting base with two bolts.

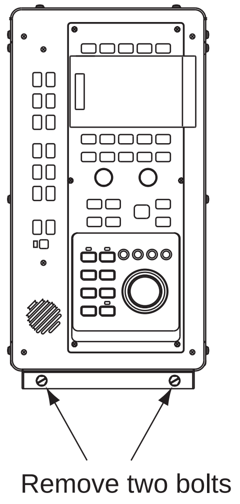

Processor unit

Top view

9.2 Monitor

Use a commercially available monitor having the specifications shown below.

- Signal: Analog RGB, 0 – 0.9 V, Positive, 75 Ω
- Synchro. signal: Horizontal, TTL level, 31.687 kHz±4 Hz, 75 Ω
  Vertical, TTL level, 60.111 Hz±0.007 Hz, 75 Ω
- Resolution: VGA, 664 x 481

Mount the monitor in portrait orientation. Note that FURUNO monitor model MU-151C can be used in portrait orientation.

9.3 Connecting cables

Fabricate the cables as shown in the section “4.4 Cables Fabrication and Connect Assembling in Display and Interface Units.” Connect the cables, referring to the interconnection diagrams at the back of this manual.

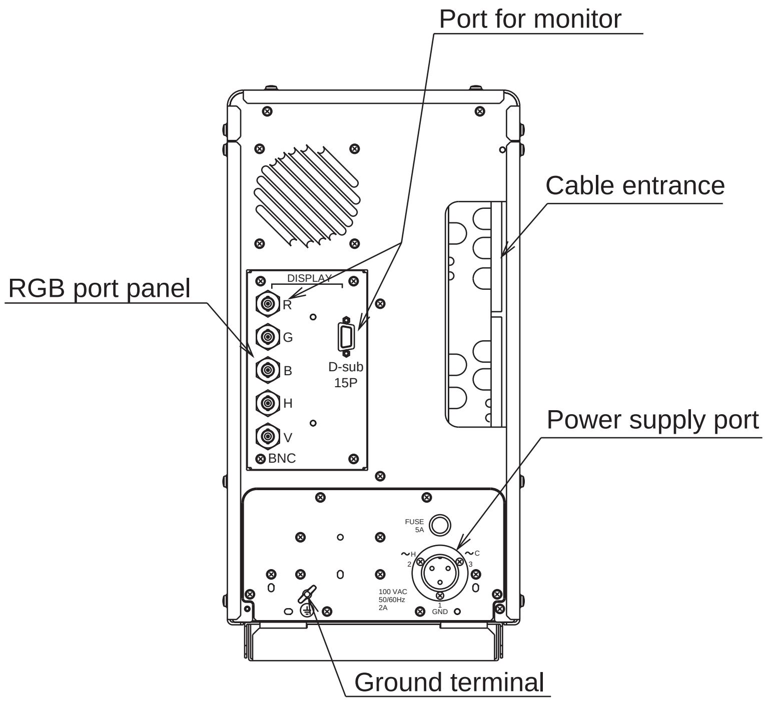

Processor unit (rear panel)

Protective earth

Attach protective earth cable (IV-8sq, shipyard supply) between the GND terminal of the processor unit and ship’s body.

⚠ CAUTION
Securely attach protective earth to the ship's body. The protective earth is required to prevent electrical shock.

Connectors for Monitor

There are two kinds of video signal ports: D-sub connector (default) and BNC connectors.

- D-sub: Use interconnection cable 3COX-2P-6C (5 m or 10 m) or equivalent commercially available cable.
- BNC connector: Use five 75 Ω coaxial cables (shipyard supply). The coaxial cables are preferred in case of longer than 10 m cable run between the processor unit and monitor.

The following modification is required to use the BNC connectors.

1. Dismount the RGB port panel at the rear of the processor unit.
2. Confirming the label attached to each BNC connector, connect each connector to its corresponding port.
3. Mount the RGB port panel.

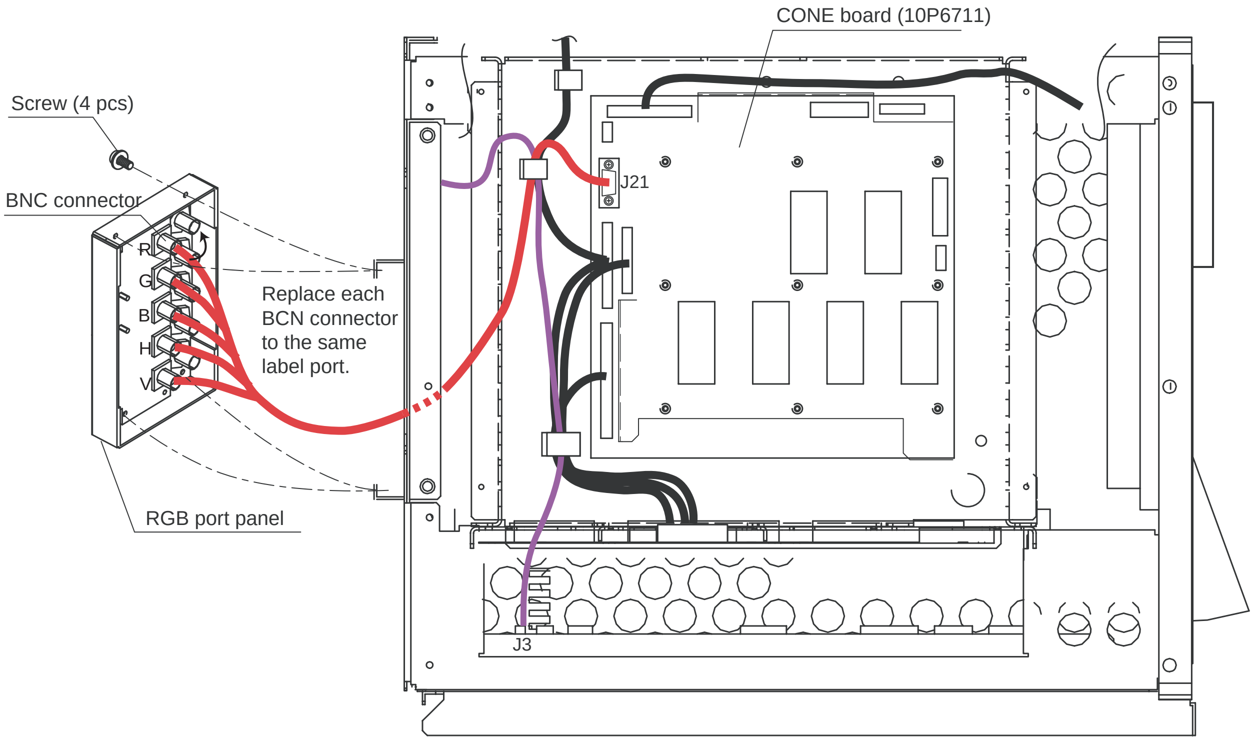

Processor unit (right side, cover removed)

PACKING LIST

CSH-235/235K/235F/535/585/735/835

NAME	OUTLINE	DESCRIPTION/CODE №	Q'TY
ユニット UNIT			
操作制御部 PROCESSOR UNIT	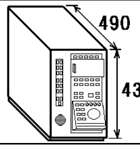	CSH-235 000-070-191 **	1
予備品 SPARE PARTS			
予備品 SPARE PARTS	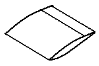	SP10-03201 006-030-590	1
工事材料 INSTALLATION MATERIALS			
工事材料 INSTALLATION MATERIALS	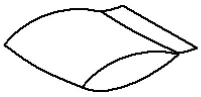	CP10-06301 006-030-600	1

1.ｺｰﾄﾞ番号末尾の[**]は、選択品の代表型式/ｺｰﾄﾞを表します。
CODE NUMBER ENDING WITH "**" INDICATES THE CODE NUMBER OF REPRESENTATIVE MATERIAL.

（略図の寸法は、参考値です。 DIMENSIONS IN DRAWING FOR REFERENCE ONLY.）

CODE NO.	006-030-590	10CJ-X-9301 -1 1/1
TYPE	SP10-03201	BOX NO. P

SHIP NO.	SPARE PARTS LIST FOR	U S E	SETS PER VESSEL

ITEM NO.	NAME OF PART	OUTLINE	DWG. NO. OR TYPE NO.	QUANTITY WORKING PER SET	QUANTITY WORKING PER VES	QUANTITY SPARE	REMARKS/CODE NO.
1	ヒューズ FUSE	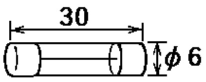	FGBO-A 5A AC125V			3	000-549-064

MFR'S NAME	FURUNO ELECTRIC CO.,LTD.	DWG NO.	10CJ-X-9301	1/1

(略図の寸法は、参考値です。 DIMENSIONS IN DRAWING FOR REFERENCE ONLY.)

FURUNO

CODE NO.	006-030-600	10CJ-X-9401 -0
TYPE	CP10-06301	1/1

工事材料表
INSTALLATION MATERIALS

番号 NO.	名称 NAME	略図 OUTLINE	型名／規格 DESCRIPTIONS		数量 Q'TY	用途／備考 REMARKS
1	+ﾄﾗｽﾀｯﾋﾟﾝﾈｼﾞ　1種 SELF-TAPPING SCREW	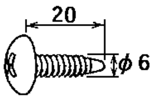	6X20 SUS304		6	
			CODE NO.	000-802-084		
2	ｺﾈｸﾀ(NCS) CONNECTOR(NCS)	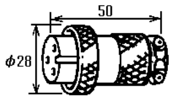	NCS-253-P		1	
			CODE NO.	000-506-503		

FURUNO ELECTRIC CO ., LTD.

（略図の寸法は、参考値です。 DIMENSIONS IN DRAWING FOR REFERENCE ONLY.）

FURUNO

CODE NO.	000-066-918	10BY-X-9301 -8 1/1
TYPE	SP10-02000	BOX NO. P

SHIP NO.	SPARE PARTS LIST FOR	U S E	SETS PER VESSEL

ITEM NO.	NAME OF PART	OUTLINE	DWG. NO. OR TYPE NO.	QUANTITY WORKING PER SET	QUANTITY WORKING PER VES	QUANTITY SPARE	REMARKS/CODE NO.
1	ﾋｭｰｽﾞ FUSE	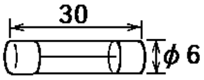	FGA0 10A AC125V	1		5	指示装置用 FOR DISPLAY UNIT 000-126-852
2	ﾋｭｰｽﾞ FUSE	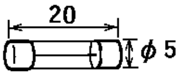	FGMA 2A AC125V	2		4	指示装置用 FOR DISPLAY UNIT 000-126-841
3	ﾋｭｰｽﾞ FUSE	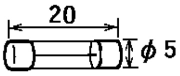	FGMA 1A AC125V	1		2	指示装置用 FOR DISPLAY UNIT 000-126-840
4	ﾋｭｰｽﾞ FUSE	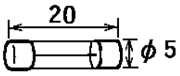	FGMA 3A 125V(UL)	1		2	指示装置用 FOR DISPLAY UNIT 000-111-848
5	管入りﾋｭｰｽﾞ FUSE	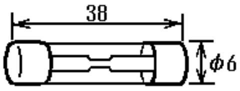	F-7165 20A AC250V	1		2	指示装置用 FOR DISPLAY UNIT 000-547-022
6	XHｺﾈｸﾀ組品 XH. CONNECTOR ASSY.	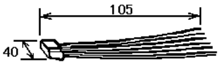	10-286(15P)	1		1	受信装置用 FOR RECEIVER UNIT 006-902-750
7	XHｺﾈｸﾀ組品 XH. CONNECTOR ASSY.	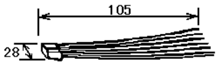	10-285(10P)	1		1	受信装置用 FOR RECEIVER UNIT 006-902-740
8	ﾋｭｰｽﾞ FUSE	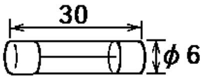	FGB0-A 2A AC125V	16		20	送信装置用 FOR TRANSMITTER UNIT 000-549-062
9	ｺﾈｸﾀ抜き工具 CONNECTOR PULLER	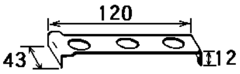	10-038-3901-0		1		受信装置用 FOR RECEIVER UNIT 100-075-230

MFR'S NAME	FURUNO ELECTRIC CO.,LTD.	DWG NO.	C1290-P01-J	1/1

(略図の寸法は、参考値です。 DIMENSIONS IN DRAWING FOR REFERENCE ONLY.)

FURUNO

CODE NO.	000-070-211	10CL-X-9301 -0 1/1
TYPE	SP10-03600	BOX NO. P

SHIP NO.	SPARE PARTS LIST FOR	U S E	SETS PER VESSEL

ITEM NO.	NAME OF PART	OUTLINE	DWG. NO. OR TYPE NO.	QUANTITY WORKING PER SET	QUANTITY WORKING PER VES	QUANTITY SPARE	REMARKS/CODE NO.
1	管入りﾋｭｰｽﾞ FUSE	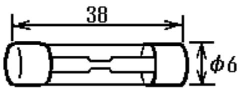	F-7165 20A AC250V			2	指示装置用**** FOR DISPLAY UNIT 000-547-022
2	XHｺﾈｸﾀ組品 XH.CONNECTOR ASSY.	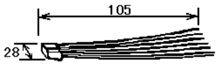	10-285(10P)			1	受信装置用 FOR RECEIVER UNIT 006-902-740
3	XHｺﾈｸﾀ組品 XH.CONNECTOR ASSY.	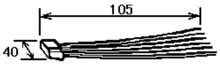	10-286(15P)			1	受信装置用 FOR RECEIVER UNIT 006-902-750
4	ｺﾈｸﾀ抜き工具 CONNECTOR PULLER	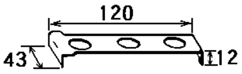	10-038-3901-0		1		受信装置用 FOR RECEIVER UNIT 100-075-230
5	ﾋｭｰｽﾞ FUSE	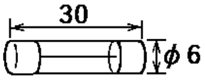	FGBO-A 2A AC125V			20	送信装置用 FOR TRANSMITTER UNIT 000-549-062

MFR'S NAME	FURUNO ELECTRIC CO.,LTD.	DWG NO.	10CL-X-9301	1/1

(略図の寸法は、参考値です。 DIMENSIONS IN DRAWING FOR REFERENCE ONLY.)

FURUNO

CODE NO.	006-934-000	10BY-X-9401 -7
TYPE	CP10-03010	1/4

工事材料表

INSTALLATION MATERIALS

番号 NO.	名称 NAME	略図 OUTLINE	型名／規格 DESCRIPTIONS		数量 Q'TY	用途／備考 REMARKS
1	ｺﾈｸﾀ(SRCN) CONNECTOR(SRCN)	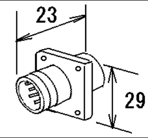	SRCN2A16-7P CODE NO.	 000-508-652	1	外部ｲﾝﾀｰﾌｪｰｽ工材用 FOR INTERFACE UNIT
2	ｺﾈｸﾀ(8016) CONNECTOR(8016)	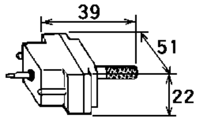	00-8016-038-313761HV CODE NO.	 000-127-234	1	外部ｲﾝﾀｰﾌｪｰｽ工材用 FOR INTERFACE UNIT
3	貼りﾏｰｸ.J201. STICKER.J201.	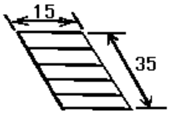	10-018-5022 CODE NO.	 181-850-220	1	外部ｲﾝﾀｰﾌｪｰｽ工材用 FOR INTERFACE UNIT
4	ｺﾈｸﾀ(54) CONNECTOR(54)	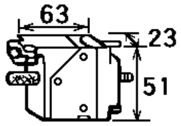	54-038-000-601/SC CODE NO.	 000-132-081	1	外部ｲﾝﾀｰﾌｪｰｽ工材用 FOR INTERFACE UNIT
5	ｺﾝﾀｸﾄ ﾋﾟﾝ (8017) CONTACT PIN (8017)	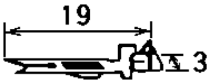	60-8017-0313-00-339 CODE NO.	 000-519-542	38	外部ｲﾝﾀｰﾌｪｰｽ工材用 FOR INTERFACE UNIT
6	ｱｰｽ線組品 GROUNDING WIRE	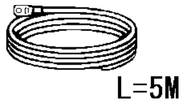	CS-120-C CODE NO.	 006-937-660	1	外部ｲﾝﾀｰﾌｪｰｽ工材用 FOR INTERFACE UNIT
7	ｺﾈｸﾀ(RM) CONNECTOR(RM)	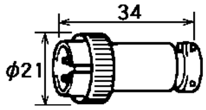	RM15TP-2PA CODE NO.	 000-503-314	1	外部ｲﾝﾀｰﾌｪｰｽ工材用 FOR INTERFACE UNIT
8	ｺﾈｸﾀ(SRCN) CONNECTOR(SRCN)	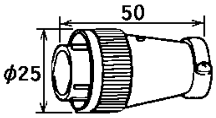	SRCN6A16-10P CODE NO.	 000-508-663	4	外部ｲﾝﾀｰﾌｪｰｽ工材用 FOR INTERFACE UNIT
9	ｺﾈｸﾀ(SRCN) CONNECTOR(SRCN)	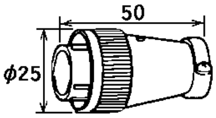	SRCN6A16-7P CODE NO.	 000-508-662	1	外部ｲﾝﾀｰﾌｪｰｽ工材用 FOR INTERFACE UNIT
10	ｺﾈｸﾀ(8016) CONNECTOR(8016)	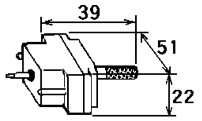	00-8016-038-313761HV CODE NO.	 000-127-234	1	指示装置工材用 FOR DISPLAY UNIT

FURUNO ELECTRIC CO ., LTD.

（略図の寸法は、参考値です。 DIMENSIONS IN DRAWING FOR REFERENCE ONLY.）

FURUNO

CODE NO.	006-934-000	10BY-X-9401 -7
TYPE	CP10-03010	2/4

工事材料表

INSTALLATION MATERIALS

番号 NO.	名称 NAME	略図 OUTLINE	型名／規格 DESCRIPTIONS		数量 Q'TY	用途／備考 REMARKS
11	ｸｰﾗｰﾊﾟﾃ COOLER PUTTY	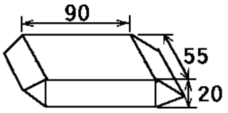	200Gｲﾘ ｼﾛｲﾛ CODE NO.	 000-807-621	2	指示装置工材用 FOR DISPLAY UNIT
12	ｲﾗｯｸｽﾁｭｰﾌﾞ(A) INSULATION TUBE(A)	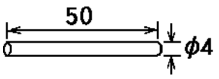	4.0X0.3 ｷｲﾛ *5CM* CODE NO.	 000-100-923	1	指示装置工材用 FOR DISPLAY UNIT
13	ｺﾈｸﾀ(NCS) CONNECTOR	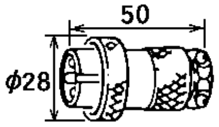	NCS-252-P CODE NO.	 000-506-501	1	指示装置工材用 FOR DISPLAY UNIT
14	ｺﾈｸﾀ(NCS) CONNECTOR(NCS)	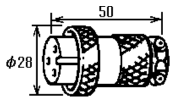	NCS-253-P CODE NO.	 000-506-503	1	指示装置工材用 FOR DISPLAY UNIT
15	ｱｰｽ板 COPPER STRAP	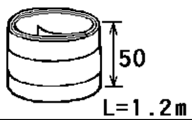	WEA-1004-0 CODE NO.	 500-310-040	1	指示装置工材用 FOR DISPLAY UNIT
16	ｺﾈｸﾀ(8016) CONNECTOR	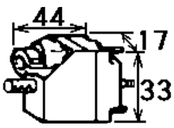	00-8016-020-313-703V CODE NO.	 000-111-143	1	受信装置工材用 FOR RECEIVER UNIT
17	P貼りﾏｰｸ.11. P STICKER.11.	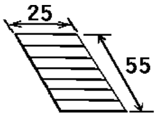	10-026-0619-0 CODE NO.	 100-014-880	1	受信装置工材用 FOR RECEIVER UNIT
18	ｺﾈｸﾀ(54) CONNECTOR(54)	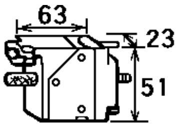	54-038-000-601/SC CODE NO.	 000-132-081	3	受信装置工材用 FOR RECEIVER UNIT
19	ｺﾝﾀｸﾄ ﾋﾟﾝ (8017) CONTACT PIN (8017)	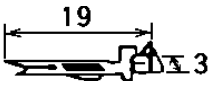	60-8017-0313-00-339 CODE NO.	 000-519-542	114	受信装置工材用 FOR RECEIVER UNIT
20	ﾎｰﾙﾌﾟﾗｸﾞ HOLE PLUG	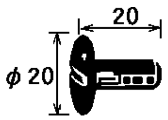	NO.4567 CODE NO.	 000-800-729	4	受信装置工材用 FOR RECEIVER UNIT

FURUNO ELECTRIC CO ., LTD.

(略図の寸法は、参考値です。 DIMENSIONS IN DRAWING FOR REFERENCE ONLY.)

FURUNO

CODE NO.	006-934-000	10BY-X-9401 -7
TYPE	CP10-03010	3/4

工事材料表

INSTALLATION MATERIALS

番号 NO.	名称 NAME	略図 OUTLINE	型名／規格 DESCRIPTIONS	数量 Q'TY	用途／備考 REMARKS
21	ｱｰｽ板 COPPER STRAP	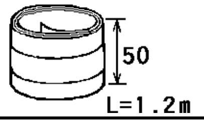	WEA-1004-0 CODE NO. 500-310-040	1	受信装置工材用 FOR RECEIVER UNIT
22	ｼｰﾙﾄﾞｽﾘｰﾌﾞ SHIELD SLEEVE	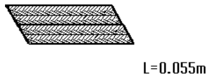	ZSK-06HF 0.055M CODE NO. 000-809-085	20	受信装置工材用 FOR RECEIVER UNIT
23	圧着端子 CRIMP-ON LUG	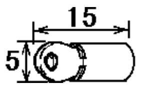	FV1.25-3.7 ｱｶ CODE NO. 000-108-699	15	上下装置用 FOR HULL UNIT
24	圧着端子 CRIMP-ON LUG	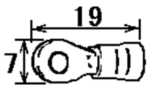	FV1.25-M4 ｱｶ CODE NO. 000-536-715	5	上下装置用 FOR HULL UNIT
25	圧着端子 CRIMP-ON LUG	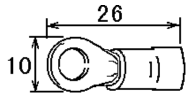	FV5.5-4 CODE NO. 000-538-123	5	上下装置用 FOR HULL UNIT
26	貼りﾏｰｸ STICKER	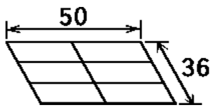	10-026-5002-0 CODE NO. 100-004-870	1	送振装置工材用 FOR TRANSMITTER UNIT
27	ｺﾈｸﾀ(54) CONNECTOR(54)	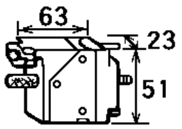	54-038-000-601/SC CODE NO. 000-132-081	3	送振装置工材用 FOR TRANSMITTER UNIT
28	ｺﾝﾀｸﾄ ﾋﾟﾝ (8017) CONTACT PIN (8017)	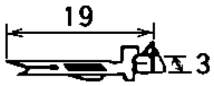	60-8017-0313-00-339 CODE NO. 000-519-542	120	送振装置工材用 FOR TRANSMITTER UNIT
29	圧着端子 CRIMP-ON LUG	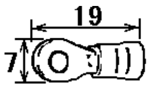	FV1.25-M4 ｱｶ CODE NO. 000-536-715	5	送振装置工材用 FOR TRANSMITTER UNIT
30	圧着端子 CRIMP-ON LUG	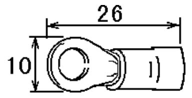	FV5.5-4 CODE NO. 000-538-123	5	送振装置工材用 FOR TRANSMITTER UNIT

FURUNO ELECTRIC CO ., LTD.

（略図の寸法は、参考値です。 DIMENSIONS IN DRAWING FOR REFERENCE ONLY.）

FURUNO

CODE NO.	006-934-000	10BY-X-9401 -7
TYPE	CP10-03010	4/4

工事材料表

INSTALLATION MATERIALS

番号 NO.	名称 NAME	略図 OUTLINE	型名／規格 DESCRIPTIONS		数量 Q'TY	用途／備考 REMARKS
31	ﾎｰﾙﾌﾟﾗｸﾞ HOLE PLUG	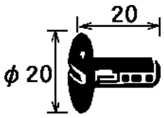	NO.4567		4	送振装置工材用 FOR TRANSMITTER UNIT
			CODE NO.	000-800-729		
32	ｱｰｽ板 COPPER STRAP	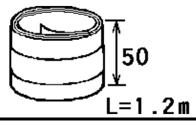	WEA-1004-0		1	送振装置工材用 FOR TRANSMITTER UNIT
			CODE NO.	500-310-040		
33	貼りﾏｰｸ.1. STICKER.1.	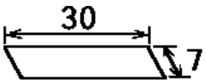	10-026-7018-0		1	電源装置用 FOR POWER UNIT
			CODE NO.	100-008-630		
34	ｺﾈｸﾀ(54) CONNECTOR(54)	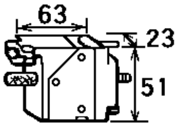	54-038-000-601/SC		1	電源装置用 FOR POWER UNIT
			CODE NO.	000-132-081		
35	ｺﾝﾀｸﾄ ﾋﾟﾝ (8017) CONTACT PIN (8017)	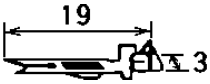	60-8017-0313-00-339		38	電源装置用 FOR POWER UNIT
			CODE NO.	000-519-542		
36	圧着端子 CRIMP-ON LUG	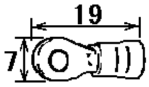	FV1.25-M4 ｱｶ		6	電源装置用 FOR POWER UNIT
			CODE NO.	000-536-715		
37	圧着端子 CRIMP-ON LUG	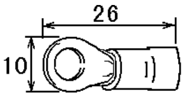	FV5.5-4		15	電源装置用 FOR POWER UNIT
			CODE NO.	000-538-123		
38	ﾎｰﾙﾌﾟﾗｸﾞ HOLE PLUG	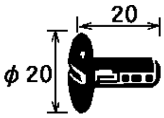	NO.4567		4	電源装置用 FOR POWER UNIT
			CODE NO.	000-800-729		
39	ｱｰｽ板 COPPER STRAP	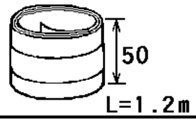	WEA-1004-0		1	電源装置用 FOR POWER UNIT
			CODE NO.	500-310-040		

FURUNO ELECTRIC CO .,LTD.

(略図の寸法は、参考値です。 DIMENSIONS IN DRAWING FOR REFERENCE ONLY.)

C1290-M04-H

FURUNO

CODE NO.		10BW-X-9405 -3
TYPE		1/1

工事材料表 INSTALLATION MATERIALS	CSH-21/K/F・22/F 23/F/FL/K・24/F/FL 53・55・80・81・82・83 84・88・288W	ｶﾗｰｽｷｬﾆﾝｸﾞｿﾅｰ COLOR SCANNING SONAR	

番号 NO.	名称 NAME	略図 OUTLINE	型名／規格 DESCRIPTIONS		数量 Q'TY	用途／備考 REMARKS
1	6ﾂｲｽﾄｹｰﾌﾞﾙ 6P TWISTED PAIR CABLE	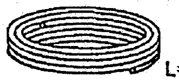 L=5m	CO-SPEV-SB 0.3X6P		1	
			CODE NO.	000-100-992		

C1286-M05- D

FURUNO ELECTRIC CO., LTD

（略図の寸法は、参考値です。 DIMENSIONS IN DRAWING FOR REFERENCE ONLY.）

FURUNO	CODE NO.	006-959-830	10CE-X-9401 -1
	TYPE	CP10-03610	1/4

工事材料表
INSTALLATION MATERIALS

番号 NO.	名称 NAME	略図 OUTLINE	型名／規格 DESCRIPTIONS	数量 Q'TY	用途／備考 REMARKS
1	ｺﾈｸﾀ(8016) CONNECTOR(8016)	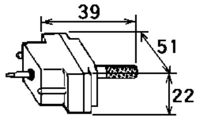	00-8016-038-313761HV CODE NO. 000-127-234	1	外部ｲﾝﾀｰﾌｪｲｽ用 FOR DATA INTERFACE UNIT
2	貼りﾏｰｸ.J201. STICKER.J201.	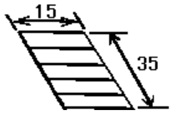	10-018-5022 CODE NO. 181-850-220	1	外部ｲﾝﾀｰﾌｪｲｽ用 FOR DATA INTERFACE UNIT
3	ｺﾈｸﾀ(54) CONNECTOR(54)	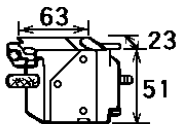	54-038-000-601/SC CODE NO. 000-132-081	1	外部ｲﾝﾀｰﾌｪｲｽ用 FOR DATA INTERFACE UNIT
4	ｺﾝﾀｸﾄ ﾋﾟﾝ (8017) CONTACT PIN (8017)	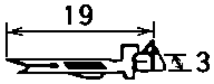	60-8017-0313-00-339 CODE NO. 000-519-542	38	外部ｲﾝﾀｰﾌｪｲｽ用 FOR DATA INTERFACE UNIT
5	ｺﾈｸﾀ(RM) CONNECTOR(RM)	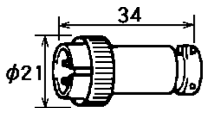	RM15TP-2PA CODE NO. 000-503-314	1	外部ｲﾝﾀｰﾌｪｲｽ用 FOR DATA INTERFACE UNIT
6	ｺﾈｸﾀ(SRCN) CONNECTOR(SRCN)	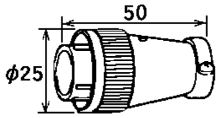	SRCN6A16-10P CODE NO. 000-508-663	4	外部ｲﾝﾀｰﾌｪｲｽ用 FOR DATA INTERFACE UNIT
7	ｺﾈｸﾀ(SRCN) CONNECTOR(SRCN)	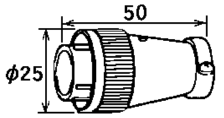	SRCN6A16-7P CODE NO. 000-508-662	1	外部ｲﾝﾀｰﾌｪｲｽ用 FOR DATA INTERFACE UNIT
8	ｺﾈｸﾀ(SRCN) CONNECTOR(SRCN)	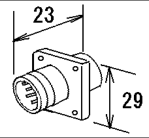	SRCN2A16-7P CODE NO. 000-508-652	1	外部ｲﾝﾀｰﾌｪｰｽ工材 FOR INTERFACE UNIT
9	ｺﾈｸﾀ(8016) CONNECTOR(8016)	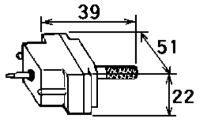	00-8016-038-313761HV CODE NO. 000-127-234	1	指示装置用 FOR DISPLAY UNIT
10	M8化粧ﾋﾞｽ PANEL SCREW	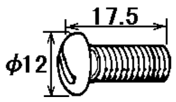	10-054-1144-0 CODE NO. 100-195-970	4	指示装置用 FOR DISPLAY UNIT

FURUNO ELECTRIC CO ., LTD.

（略図の寸法は、参考値です。 DIMENSIONS IN DRAWING FOR REFERENCE ONLY.）

FURUNO

CODE NO.	006-959-830	10CE-X-9401 -1
TYPE	CP10-03610	2/4

工事材料表
INSTALLATION MATERIALS

番号 NO.	名称 NAME	略図 OUTLINE	型名／規格 DESCRIPTIONS	数量 Q'TY	用途／備考 REMARKS
11	ｸｰﾗｰﾊﾟﾃ COOLER PUTTY	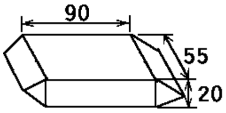	200Gｲﾘ ｼﾛｲﾛ CODE NO. 000-807-621	2	指示装置用 FOR DISPLAY UNIT
12	ｲﾗｯｸｽﾁｭｰﾌﾞ(A) INSULATION TUBE(A)	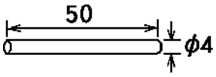	4.0X0.3 ｷｲﾛ *5CM* CODE NO. 000-100-923	1	指示装置用 FOR DISPLAY UNIT
13	ｺﾈｸﾀ(NCS) CONNECTOR	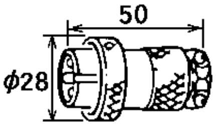	NCS-252-P CODE NO. 000-506-501	1	指示装置用 FOR DISPLAY UNIT
14	ｺﾈｸﾀ(NCS) CONNECTOR(NCS)	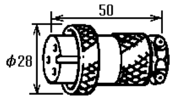	NCS-253-P CODE NO. 000-506-503	1	指示装置用 FOR DISPLAY UNIT
15	ｱｰｽ板 COPPER STRAP	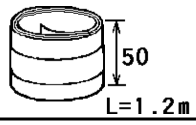	WEA-1004-0 CODE NO. 500-310-040	1	指示装置用 FOR DISPLAY UNIT
16	ｺﾈｸﾀ(8016) CONNECTOR	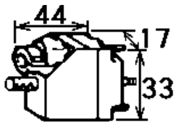	00-8016-020-313-703V CODE NO. 000-111-143	1	受信装置用 FOR RECEIVER UNIT
17	P貼りﾏｰｸ.11. P STICKER.11.	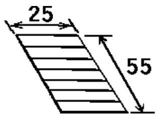	10-026-0619-0 CODE NO. 100-014-880	1	受信装置用 FOR RECEIVER UNIT
18	ｺﾈｸﾀ(54) CONNECTOR(54)	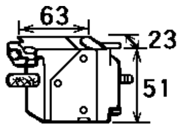	54-038-000-601/SC CODE NO. 000-132-081	3	受信装置用 FOR RECEIVER UNIT
19	ｺﾝﾀｸﾄ ﾋﾟﾝ (8017) CONTACT PIN (8017)	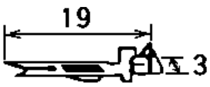	60-8017-0313-00-339 CODE NO. 000-519-542	114	受信装置用 FOR RECEIVER UNIT
20	ﾎｰﾙﾌﾟﾗｸﾞ HOLE PLUG	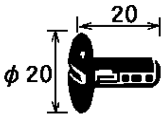	NO.4567 CODE NO. 000-800-729	4	受信装置用 FOR RECEIVER UNIT

FURUNO ELECTRIC CO ., LTD.

（略図の寸法は、参考値です。 DIMENSIONS IN DRAWING FOR REFERENCE ONLY.）

FURUNO

CODE NO.	006-959-830	10CE-X-9401 -1
TYPE	CP10-03610	3/4

工事材料表

INSTALLATION MATERIALS

番号 NO.	名称 NAME	略図 OUTLINE	型名／規格 DESCRIPTIONS		数量 Q'TY	用途／備考 REMARKS
21	ｱｰｽ板 COPPER STRAP	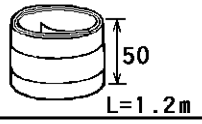	WEA-1004-0		1	受信装置用 FOR RECEIVER UNIT
			CODE NO.	500-310-040		
22	ｼｰﾙﾄﾞｽﾘｰﾌﾞ SHIELD SLEEVE	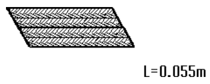	ZSK-06HF 0.055M		20	受信装置用 FOR RECEIVER UNIT
			CODE NO.	000-809-085		
23	圧着端子 CRIMP-ON LUG	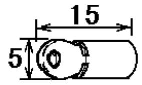	FV1.25-3.7 ｱｶ		15	上下装置用 FOR HULL UNIT
			CODE NO.	000-108-699		
24	圧着端子 CRIMP-ON LUG	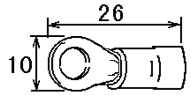	FV5.5-4		5	上下装置用 FOR HULL UNIT
			CODE NO.	000-538-123		
25	圧着端子 CRIMP-ON LUG	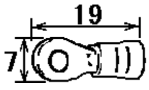	FV1.25-M4 ｱｶ		5	上下装置用 FOR HULL UNIT
			CODE NO.	000-536-715		
26	貼りﾏｰｸ STICKER	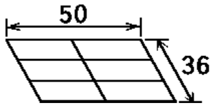	10-026-5002-0		1	送振装置用 FOR TRANSMITTER UNIT
			CODE NO.	100-004-870		
27	ｺﾈｸﾀ(54) CONNECTOR(54)	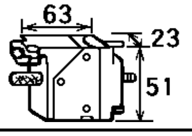	54-038-000-601/SC		3	送振装置用 FOR TRANSMITTER UNIT
			CODE NO.	000-132-081		
28	ｺﾝﾀｸﾄ ﾋﾟﾝ (8017) CONTACT PIN (8017)	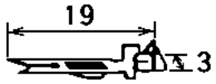	60-8017-0313-00-339		120	送振装置用 FOR TRANSMITTER UNIT
			CODE NO.	000-519-542		
29	圧着端子 CRIMP-ON LUG	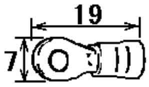	FV1.25-M4 ｱｶ		5	送振装置用 FOR TRANSMITTER UNIT
			CODE NO.	000-536-715		
30	圧着端子 CRIMP-ON LUG	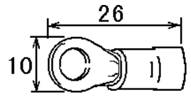	FV5.5-4		5	送振装置用 FOR TRANSMITTER UNIT
			CODE NO.	000-538-123		

FURUNO ELECTRIC CO ., LTD.

(略図の寸法は、参考値です。 DIMENSIONS IN DRAWING FOR REFERENCE ONLY.)

FURUNO

CODE NO.	006-959-830	10CE-X-9401 -1
TYPE	CP10-03610	4/4

工事材料表

INSTALLATION MATERIALS

番号 NO.	名称 NAME	略図 OUTLINE	型名／規格 DESCRIPTIONS	数量 Q'TY	用途／備考 REMARKS
31	ﾎｰﾙﾌﾟﾗｸﾞ HOLE PLUG	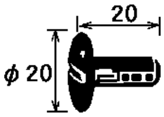	NO.4567 CODE NO. 000-800-729	4	送振装置用 FOR TRANSMITTER UNIT
32	ｱｰｽ板 COPPER STRAP	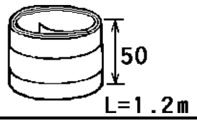	WEA-1004-0 CODE NO. 500-310-040	1	送振装置用 FOR TRANSMITTER UNIT
33	ｺﾝﾀｸﾄ ﾋﾟﾝ (8017) CONTACT PIN (8017)	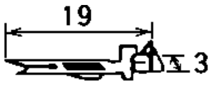	60-8017-0313-00-339 CODE NO. 000-519-542	38	電源装置用 FOR POWER SUPPLY UNIT
34	圧着端子 CRIMP-ON LUG	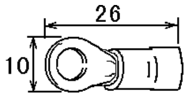	FV5.5-4 CODE NO. 000-538-123	15	電源装置用 FOR POWER SUPPLY UNIT
35	ﾎｰﾙﾌﾟﾗｸﾞ HOLE PLUG	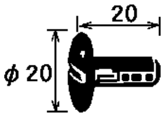	NO.4567 CODE NO. 000-800-729	4	電源装置用 FOR POWER SUPPLY UNIT
36	貼りﾏｰｸ.1. STICKER.1.	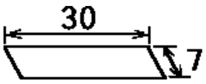	10-026-7018-0 CODE NO. 100-008-630	1	電源装置用 FOR POWER SUPPLY UNIT
37	ｺﾈｸﾀ(54) CONNECTOR(54)	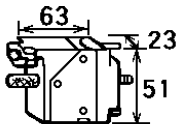	54-038-000-601/SC CODE NO. 000-132-081	1	電源装置用 FOR POWER SUPPLY UNIT
38	圧着端子 CRIMP-ON LUG	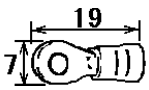	FV1.25-M4 ｱｶ CODE NO. 000-536-715	6	電源装置用 FOR POWER SUPPLY UNIT
39	ｱｰｽ板 COPPER STRAP	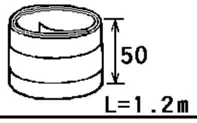	WEA-1004-0 CODE NO. 500-310-040	1	電源装置用 FOR POWER SUPPLY UNIT

FURUNO ELECTRIC CO .,LTD.

(略図の寸法は、参考値です。 DIMENSIONS IN DRAWING FOR REFERENCE ONLY.)

FURUNO

CODE NO.	006-030-670	10CL-X-9401 -0
TYPE	CP10-06610	1/4

工事材料表

INSTALLATION MATERIALS

番号 NO.	名称 NAME	略図 OUTLINE	型名／規格 DESCRIPTIONS	数量 Q'TY	用途／備考 REMARKS
1	ｺﾈｸﾀ(8016) CONNECTOR(8016)	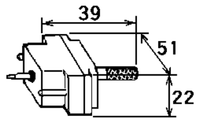	00-8016-038-313761HV CODE NO. 000-127-234	1	外部ｲﾝﾀｰﾌｪｲｽ工材 FOR INTERFACE UNIT
2	ｱｰｽ線組品 GROUNDING WIRE	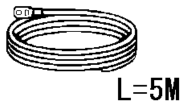	CS-120-C CODE NO. 006-937-660	1	外部ｲﾝﾀｰﾌｪｰｽ工材 FOR INTERFACE UNIT
3	貼りﾏｰｸ.J201. STICKER.J201.	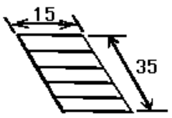	10-018-5022 CODE NO. 181-850-220	1	外部ｲﾝﾀｰﾌｪｰｽ工材 FOR INTERFACE UNIT
4	ｺﾈｸﾀ(54) CONNECTOR(54)	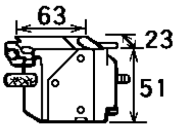	54-038-000-601/SC CODE NO. 000-132-081	1	外部ｲﾝﾀｰﾌｪｰｽ工材 FOR INTERFACE UNIT
5	ｺﾝﾀｸﾄ ﾋﾟﾝ (8017) CONTACT PIN (8017)	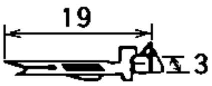	60-8017-0313-00-339 CODE NO. 000-519-542	38	外部ｲﾝﾀｰﾌｪｰｽ工材 FOR INTERFACE UNIT
6	ｺﾈｸﾀ(RM) CONNECTOR(RM)	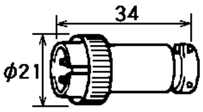	RM15TP-2PA CODE NO. 000-503-314	1	外部ｲﾝﾀｰﾌｪｰｽ工材 FOR INTERFACE UNIT
7	ｺﾈｸﾀ(SRCN) CONNECTOR(SRCN)	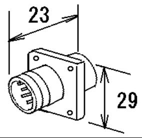	SRCN2A16-7P CODE NO. 000-508-652	1	外部ｲﾝﾀｰﾌｪｰｽ工材 FOR INTERFACE UNIT
8	ｺﾈｸﾀ(SRCN) CONNECTOR(SRCN)	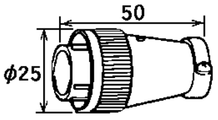	SRCN6A16-10P CODE NO. 000-508-663	4	外部ｲﾝﾀｰﾌｪｰｽ工材 FOR INTERFACE UNIT
9	ｺﾈｸﾀ(SRCN) CONNECTOR(SRCN)	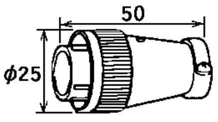	SRCN6A16-7P CODE NO. 000-508-662	1	外部ｲﾝﾀｰﾌｪｰｽ工材 FOR INTERFACE UNIT
10	ｺﾈｸﾀ(8016) CONNECTOR	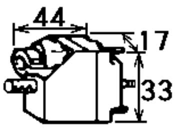	00-8016-020-313-703V CODE NO. 000-111-143	1	受信装置工材 FOR RECEIVER UNIT

10CL-X-9401

FURUNO ELECTRIC CO ., LTD.

(略図の寸法は、参考値です。 DIMENSIONS IN DRAWING FOR REFERENCE ONLY.)

FURUNO

CODE NO.	006-030-670	10CL-X-9401 -0
TYPE	CP10-06610	2/4

工事材料表

INSTALLATION MATERIALS

番号 NO.	名称 NAME	略図 OUTLINE	型名／規格 DESCRIPTIONS		数量 Q'TY	用途／備考 REMARKS
11	P貼りマーク.11. P STICKER.11.	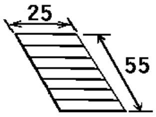	10-026-0619-0 CODE NO.	 100-014-880	1	受信装置工材 FOR RECEIVER UNIT
12	コネクタ(54) CONNECTOR(54)	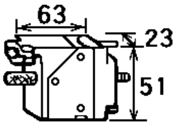	54-038-000-601/SC CODE NO.	 000-132-081	3	受信装置工材 FOR RECEIVER UNIT
13	コンタクト ピン (8017) CONTACT PIN (8017)	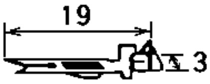	60-8017-0313-00-339 CODE NO.	 000-519-542	114	受信装置工材 FOR RECEIVER UNIT
14	ホールプラグ HOLE PLUG	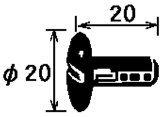	NO.4567 CODE NO.	 000-800-729	4	受信装置工材 FOR RECEIVER UNIT
15	アース板 COPPER STRAP	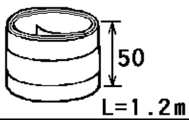	WEA-1004-0 CODE NO.	 500-310-040	1	受信装置工材 FOR RECEIVER UNIT
16	シールドスリーブ SHIELD SLEEVE	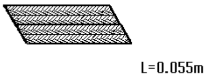	ZSK-06HF 0.055M CODE NO.	 000-809-085	20	受信装置工材 FOR RECEIVER UNIT
17	圧着端子 CRIMP-ON LUG	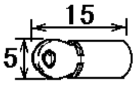	FV1.25-3.7 アカ CODE NO.	 000-108-699	15	上下装置工材 FOR HULL UNIT
18	圧着端子 CRIMP-ON LUG	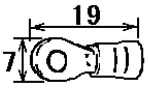	FV1.25-M4 アカ CODE NO.	 000-536-715	5	上下装置工材 FOR HULL UNIT
19	圧着端子 CRIMP-ON LUG	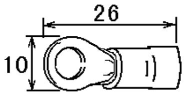	FV5.5-4 CODE NO.	 000-538-123	5	上下装置工材 FOR HULL UNIT
20	貼りマーク STICKER	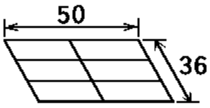	10-026-5002-0 CODE NO.	 100-004-870	1	送信装置工材 FOR TRANSMITTER UNIT

10CL-X-9401

FURUNO ELECTRIC CO ., LTD.

(略図の寸法は、参考値です。 DIMENSIONS IN DRAWING FOR REFERENCE ONLY.)

FURUNO

CODE NO.	006-030-670	10CL-X-9401 -0
TYPE	CP10-06610	3/4

工事材料表
INSTALLATION MATERIALS

番号 NO.	名 称 NAME	略 図 OUTLINE	型名／規格 DESCRIPTIONS	数量 Q'TY	用途／備考 REMARKS
21	ｺﾈｸﾀ(54) CONNECTOR(54)	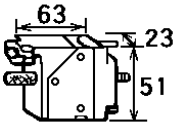	54-038-000-601/SC CODE NO. 000-132-081	3	送信装置工材 FOR TRANSMITTER UNIT
22	ｺﾝﾀｸﾄ ﾋﾟﾝ (8017) CONTACT PIN (8017)	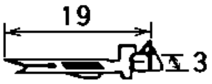	60-8017-0313-00-339 CODE NO. 000-519-542	120	送信装置工材 FOR TRANSMITTER UNIT
23	圧着端子 CRIMP-ON LUG	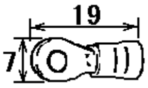	FV1.25-M4 ｱｶ CODE NO. 000-536-715	5	送信装置工材 FOR TRANSMITTER UNIT
24	圧着端子 CRIMP-ON LUG	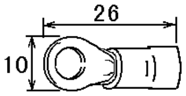	FV5.5-4 CODE NO. 000-538-123	5	送信装置工材 FOR TRANSMITTER UNIT
25	ﾎｰﾙﾌﾟﾗｸﾞ HOLE PLUG	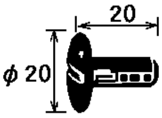	NO.4567 CODE NO. 000-800-729	4	送信装置工材 FOR TRANSMITTER UNIT
26	ｱｰｽ板 COPPER STRAP	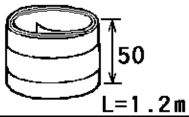	WEA-1004-0 CODE NO. 500-310-040	1	送信装置工材 FOR TRANSMITTER UNIT
27	貼りﾏｰｸ.1. STICKER.1.	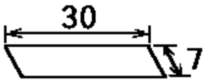	10-026-7018-0 CODE NO. 100-008-630	1	電源装置工材 FOR POWER UNIT
28	ｺﾈｸﾀ(54) CONNECTOR(54)	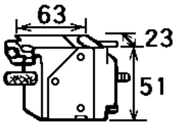	54-038-000-601/SC CODE NO. 000-132-081	1	電源装置工材 FOR POWER UNIT
29	ｺﾝﾀｸﾄ ﾋﾟﾝ (8017) CONTACT PIN (8017)	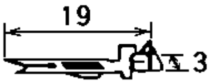	60-8017-0313-00-339 CODE NO. 000-519-542	38	電源装置工材 FOR POWER UNIT
30	圧着端子 CRIMP-ON LUG	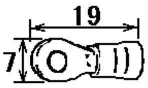	FV1.25-M4 ｱｶ CODE NO. 000-536-715	6	電源装置工材 FOR POWER UNIT

FURUNO ELECTRIC CO ., LTD.

(略図の寸法は、参考値です。 DIMENSIONS IN DRAWING FOR REFERENCE ONLY.)

FURUNO

CODE NO.	006-030-670	10CL-X-9401 -0
TYPE	CP10-06610	4/4

工事材料表
INSTALLATION MATERIALS

番号 NO.	名　称 NAME	略　図 OUTLINE	型名／規格 DESCRIPTIONS	数量 Q'TY	用途／備考 REMARKS
31	圧着端子 CRIMP-ON LUG	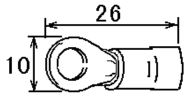	FV5.5-4 CODE NO. 000-538-123	15	電源装置工材 FOR POWER UNIT
32	ﾎｰﾙﾌﾟﾗｸﾞ HOLE PLUG	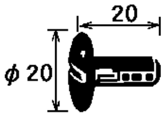	NO.4567 CODE NO. 000-800-729	4	電源装置工材 FOR POWER UNIT
33	ｱｰｽ板 COPPER STRAP	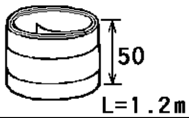	WEA-1004-0 CODE NO. 500-310-040	1	電源装置工材 FOR POWER UNIT

FURUNO ELECTRIC CO., LTD.

（略図の寸法は、参考値です。 DIMENSIONS IN DRAWING FOR REFERENCE ONLY.）

FURUNO

CODE NO.	006-027-830	10CI-X-9501 -2
TYPE	FP10-01801	1/1

付属品表

ACCESSORIES

番号 NO.	名称 NAME	略図 OUTLINE	型名／規格 DESCRIPTIONS	数量 Q'TY	用途／備考 REMARKS
1	ﾌｰﾄﾞ HOOD	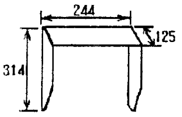	10-062-1601-0 CODE NO. 100-250-550	1	
2	ﾌｰﾄﾞ取り付け金具 HOOD MOUNTING PLATE	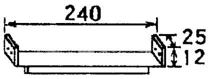	16-062-1602-0 CODE NO. 100-250-560	1	
3	ﾌｨﾙﾀｰﾋﾞｽ FILTER MOUNTING SCREW	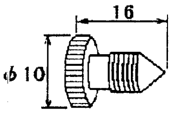	66-007-1222-0 CODE NO. 860-712-220	1	
4	+ﾊﾞｲﾝﾄﾞ小ﾈｼﾞ BINDING HEAD SCREW	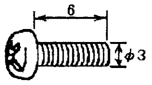	M3X6 C2700Wﾎﾞﾘｼｰﾙ ｸﾛ ﾅｲﾛﾝﾜｯｼｬﾂｷ CODE NO. 000-800-582	4	

DWG NO.
C1307-F01- B

FURUNO ELECTRIC CO., LTD.

（略図の寸法は、参考値です。 DIMENSIONS IN DRAWING FOR REFERENCE ONLY.）

FURUNO

CODE NO.	006-989-020	10BW-X-9505 -1
TYPE	FP10-01201	1/1

付属品表

ACCESSORIES

番号 NO.	名称 NAME	略図 OUTLINE	型名／規格 DESCRIPTIONS	数量 Q'TY	用途／備考 REMARKS
1	取手 HANDLE	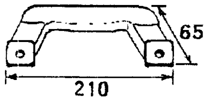	14-002-1125-2 CODE NO. 840-211-252	2	
2	ﾛｰｾﾞｯﾄ座金 ROSETTE WASHER	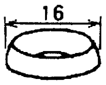	M6 C2700W ﾎﾞﾘｼｰﾙ ｸﾛ CODE NO. 000-864-910	4	
3	+丸皿小ﾈｼﾞ OVAL COUNTERSUNK HEAD SCREW	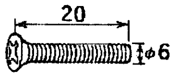	M6X20 C2700W ﾎﾞﾘｼｰﾙ ｸﾛ CODE NO. 000-861-475	4	
4	波座金 WAVE WASHER	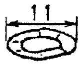	WW-6 SUS CODE NO. 000-864-350	4	

DWG NO.
C1286-F01- F

FURUNO ELECTRIC CO ., LTD.

(略図の寸法は、参考値です。 DIMENSIONS IN DRAWING FOR REFERENCE ONLY.)

FURUNO

CODE NO.	006-989-040	10CF-X-9501 -1 1/1
TYPE	FP10-01203	

付属品表 ACCESSORIES	CSH-55/53/23・F・K 73/83 ﾘﾓｰﾄ掛け具 REMOTE HOOK	

番号 NO.	名称 NAME	略図 OUTLINE	型名／規格 DESCRIPTIONS	数量 Q'TY	用途／備考 REMARKS
1	掛具 HOOK	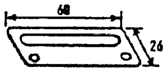	10-026-8226-1 CODE NO. 100-008-801	1	
2	+ﾅﾍﾞPﾀｲﾄﾈｼﾞ SCREW	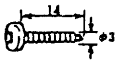	3X14 SWCH18A MFZN-2-C CODE NO. 000-800-172	2	

C1297-F01- A

FURUNO ELECTRIC CO., LTD

(略図の寸法は、参考値です。 DIMENSIONS IN DRAWING FOR REFERENCE ONLY.)

FURUNO

CODE NO.		10BW-X-9501 -5
TYPE		1/1

付属品表 ACCESSORIES	CSH-21/F/K/216/216F, CSH-23/F/K/FL CSH-53, 58 CSH-71, 73 CSH-81, 83	

番 号 NO.	名 称 NAME	略 図 OUTLINE	型名／規格 DESCRIPTIONS	数量 Q'TY	用途／備考 REMARKS
1	ﾅｲﾛﾝｶﾊﾞｰ PLASTIC COVER	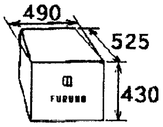	10-051-1031 CODE NO. 000-803-289	1	

DWG NO.
C1286-F05- B

FURUNO ELECTRIC CO ., LTD.

(略図の寸法は、参考値です。 DIMENSIONS IN DRAWING FOR REFERENCE ONLY.)

FURUNO

CODE NO.	006-908-550	10CM-X-9501 -1
TYPE	FP10-01901	1/1

付属品表
ACCESSORIES

CSH-24/24F/24FL/84 ｶﾗｰｽｷｬﾆﾝｸﾞｿﾅｰ

COLOR SCANNING SONAR

番号 NO.	名称 NAME	略図 OUTLINE	型名／規格 DESCRIPTIONS	数量 Q'TY	用途／備考 REMARKS
1	+ﾊﾞｲﾝﾄﾞ小ﾈｼﾞ BINDING HEAD SCREW	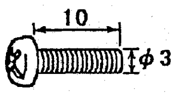	M3X10 C2700Wﾎﾟﾘｼｰﾙ ｸﾛ ﾅｲﾛﾝﾜｯｼｬﾂｷ CODE NO. 000-800-923	4	
2	ﾌｰﾄﾞ取付金具 HOOD FIXTURE	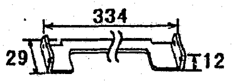	10-064-1602-0 CODE NO. 100-253-720	1	
3	ﾌｨﾙﾀｰﾋﾞｽ FILTER MOUNTING SCREW	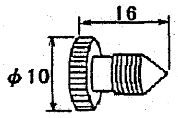	66-007-1222-0 CODE NO. 860-712-220	1	

C1310-F01- B

FURUNO ELECTRIC CO ., LTD

(略図の寸法は、参考値です。 DIMENSIONS IN DRAWING FOR REFERENCE ONLY.)

FURUNO

CODE NO.		10CB-X-9501 -2
TYPE		1/1

付属品表 ACCESSORIES	CSH-288W/88/22/22F 72/82/24/24F/24FL 84 カラースキャニング゛ソナー COLOR SCANNING SONAR	

番号 NO.	名称 NAME	略図 OUTLINE	型名／規格 DESCRIPTIONS		数量 Q'TY	用途／備考 REMARKS
1	ナイロンカバ゛ー PLASTIC COVER	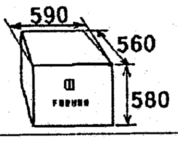	10-054-1021		1	
			CODE NO.	000-804-936		

C1310-F03- A

FURUNO ELECTRIC CO ., LTD

（略図の寸法は、参考値です。 DIMENSIONS IN DRAWING FOR REFERENCE ONLY.）

CODE NO.		10CP-X-9501 -0
TYPE		1/1

付属品表

ACCESSORIES

CSH-23/23F/24/24F/53/58/73/83/84/

番号 NO.	名称 NAME	略図 OUTLINE	型名／規格 DESCRIPTIONS	数量 Q'TY	用途／備考 REMARKS
1	RAMｶｰﾄﾞ組品 RAM CARD		00RAM256C-001 CODE NO. 004-321-070	1	

DWG NO.
C1307-F02- A

FURUNO ELECTRIC CO., LTD.

（略図の寸法は、参考値です。 DIMENSIONS IN DRAWING FOR REFERENCE ONLY.）

FURUNO

CODE NO.		10CM-X-9502 -0
TYPE		1/1

付属品表

ACCESSORIES

CSH-24/24F/24FL/84 ｶﾗｰｽｷｬﾆﾝｸﾞ ｿﾅｰ

COLOR SCANNING SONAR

番号 NO.	名称 NAME	略図 OUTLINE	型名／規格 DESCRIPTIONS	数量 Q'TY	用途／備考 REMARKS
1	ﾌｰﾄﾞ HOOD	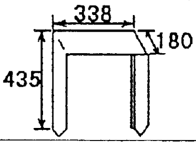	10-064-1601-0 CODE NO. 100-253-710	1	

FURUNO ELECTRIC CO., LTD

（略図の寸法は、参考値です。 DIMENSIONS IN DRAWING FOR REFERENCE ONLY.）

FURUNO

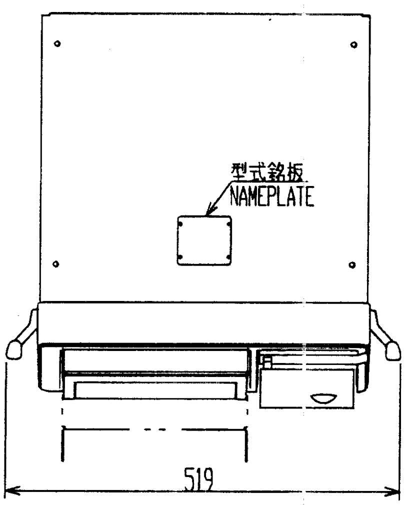

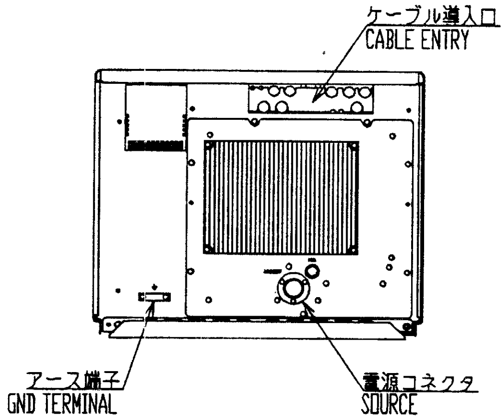

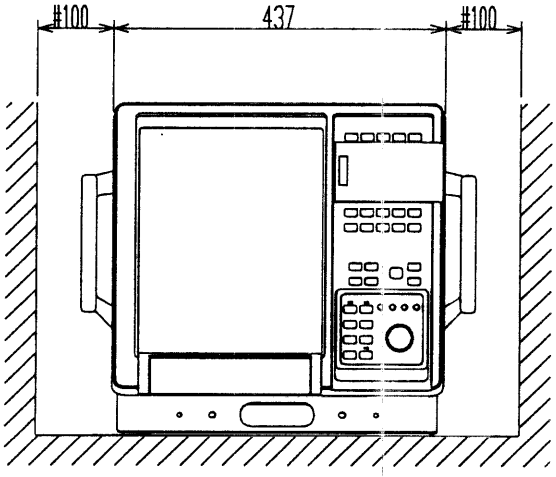

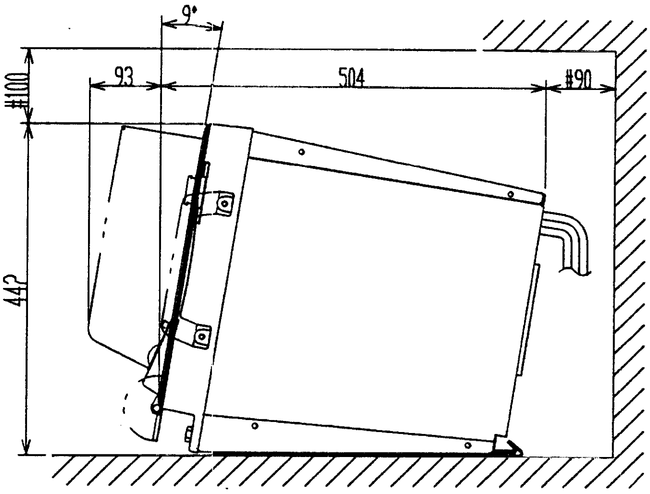

表1 TABLE 1

寸法区分(mm) DIMENSION	公差(mm) TOLERANCE
0 < L ≦ 50	±1.5
50 < L ≦ 100	±2.5
100 < L ≦ 500	±3
500 < L ≦ 1000	±4

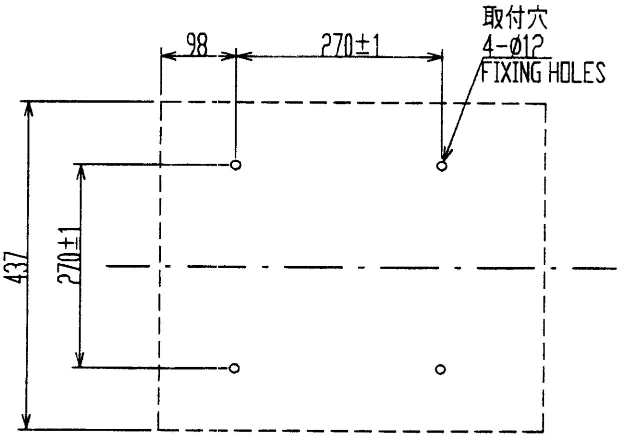

注記
1）#印寸法は最小サービス空間寸法とする
2）指定なき寸法公差は表1による。

NOTE
1. #: RECOMMENDED SERVICE CLEARANCE.
2. TABLE 1 INDICATES TOLERANCE OF DIMENSIONS.

DRAWN Jun.12 '01 T.YAMASAKI		TITLE CSH-230/236/530/536/731/736/580/586/830
CHECKED June 12 '01 T.K.		名称 指示装置
APPROVED June 12 '01 S.Y.	CSH-53/73/83/58 CSH-23/F/K	外寸図
SCALE 1/10 MASS 35 ±10% kg	CSH-230/236 INCLUDE -F/K CSH-230/236は-F/Kを含む。	NAME DISPLAY UNIT
DWG.No. C1307-G01- E	10-062-1000-G0	OUTLINE DRAWING

FURUNO ELECTRIC CO., LTD.

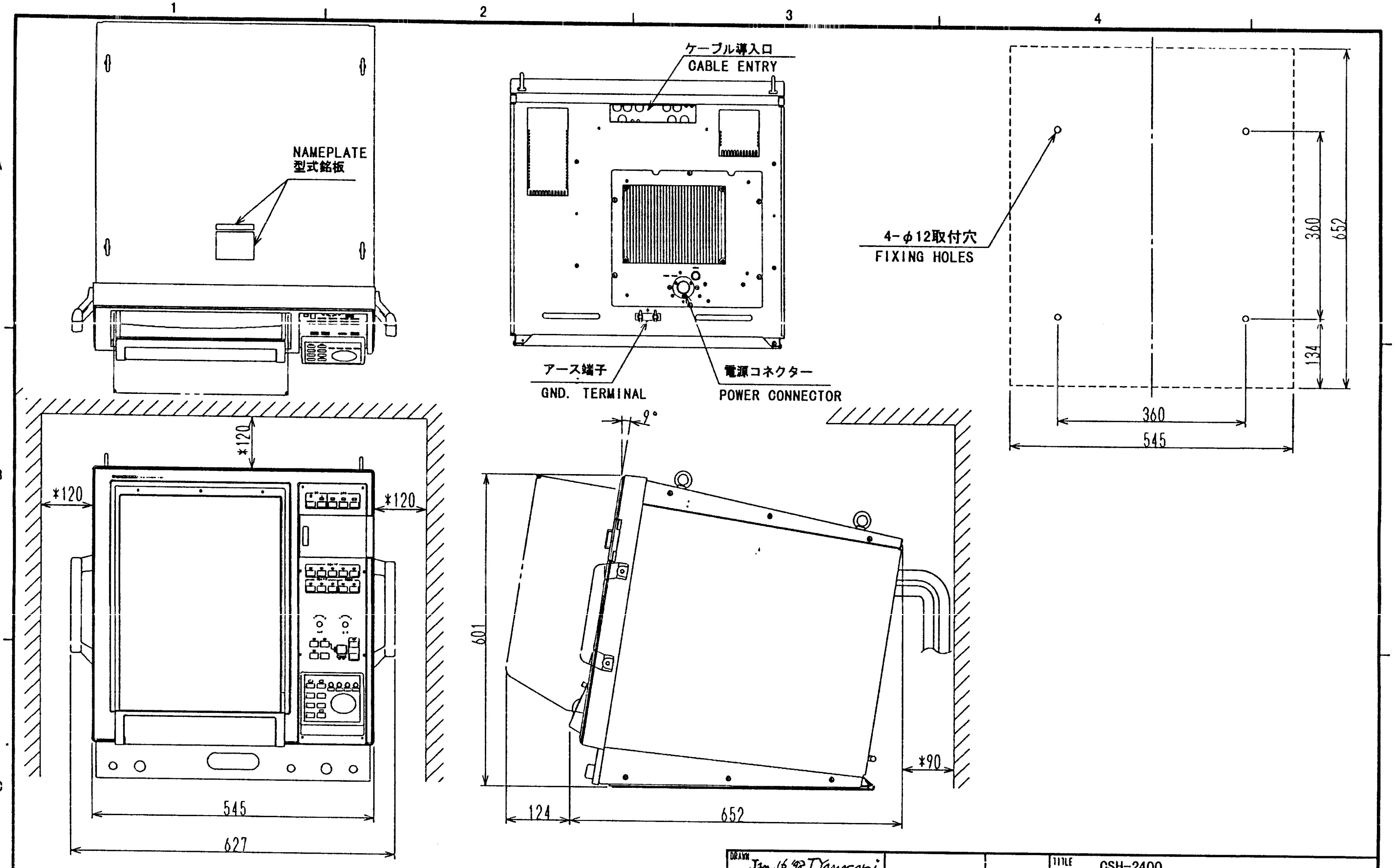

注記
1) *印寸法は最小サービス空間寸法とする.
NOTE
1. *: RECOMMENDED SERVICE CLEARANCE DIMENSION.

DRAWN Jan.16 '98 T.Yamasaki	CSH-84	TITLE	CSH-2400
CHECKED Jan 19 '98 K.Kusunoki	CSH-24FL	名称	指示装置
APPROVED Jan 19 '98 [illegible]	CSH-24F		外寸図
SCALE 1/10 MASS 66 kg	CSH-24	NAME	DISPLAY UNIT
DWG. No. C1310-G01- A	10-064-1000-G2		OUTLINE DIAGRAM

FURUNO ELECTRIC CO., LTD.

FURUNO

表 1 TABLE 1

寸法区分 (mm) DIMENSIONS	公差 (mm) TOLERANCE
L≦50	±1.5
50<L≦100	±2.5
100<L≦500	±3

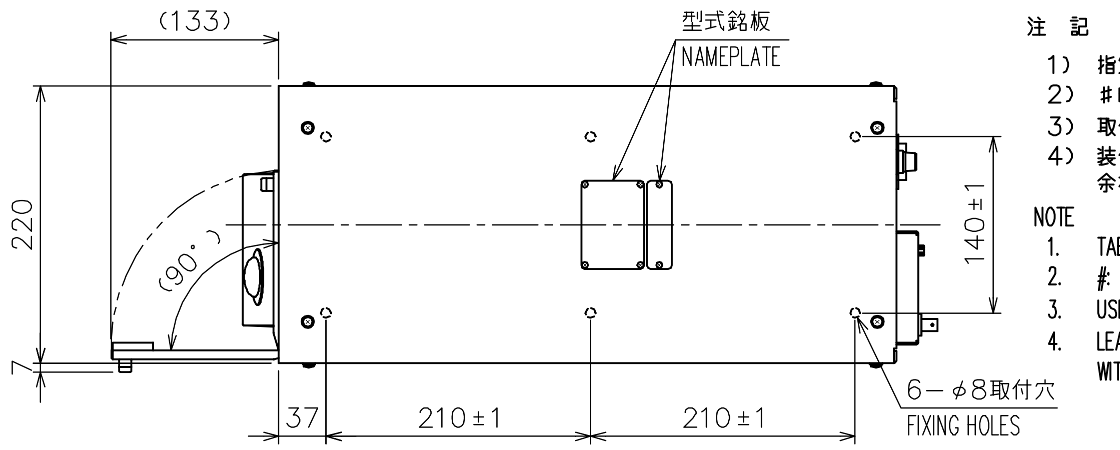

注　記

1) 指定外の寸法公差は表1による。
2) ＃印寸法は最小サービス空間寸法とする。
3) 取付用ネジは＋トラスタッピンネジ６Ｘ２０を使用のこと。
4) 装備ケーブルはサービス時、本体を前方に十分引き出せるよう余裕を持たせること。

NOTE

1. TABLE 1 INDICATES TOLERANCE OF DIMENSIONS WHICH IS NOT SPECIFIED.
2. #: MINIMUM SERVICE CLEARANCE.
3. USE SELF-TAPPING SCREWS 6x20 FOR FIXING THE UNIT.
4. LEAVE ENOUGH SLACK IN CABLING SO UNIT CAN BE DRAWN FORWARD WITHOUT DISCONNECTING CABLING.

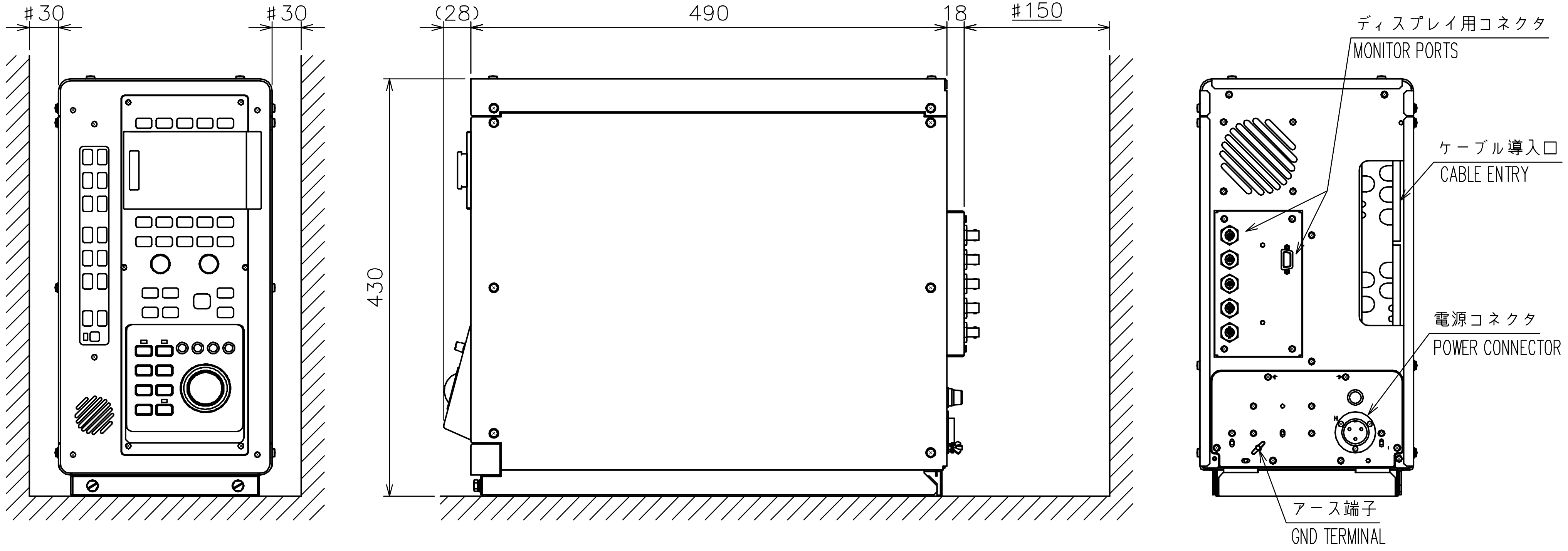

DRAWN Jan. 14, '05 E. MIYOSHI		TITLE	CSH-235/235F/235K/835/585/535/735
CHECKED TAKAHASHI. T		名称	操作制御部
APPROVED Y. Hatai	CSH-23 SERIES		外寸図
SCALE 1/6 MASS 20.0 kg ±10%		NAME	PROCESSOR UNIT
DWG No. C1304-G01- A	10-085-100G-2		OUTLINE DRAWING

FURUNO ELECTRIC CO., LTD.

表1　TABLE 1

寸法区分(mm) DIMENSION	公差(mm) TOLERANCE
0 < L ≦ 50	±1.5
50 < L ≦ 100	±2.5
100 < L ≦ 500	±3

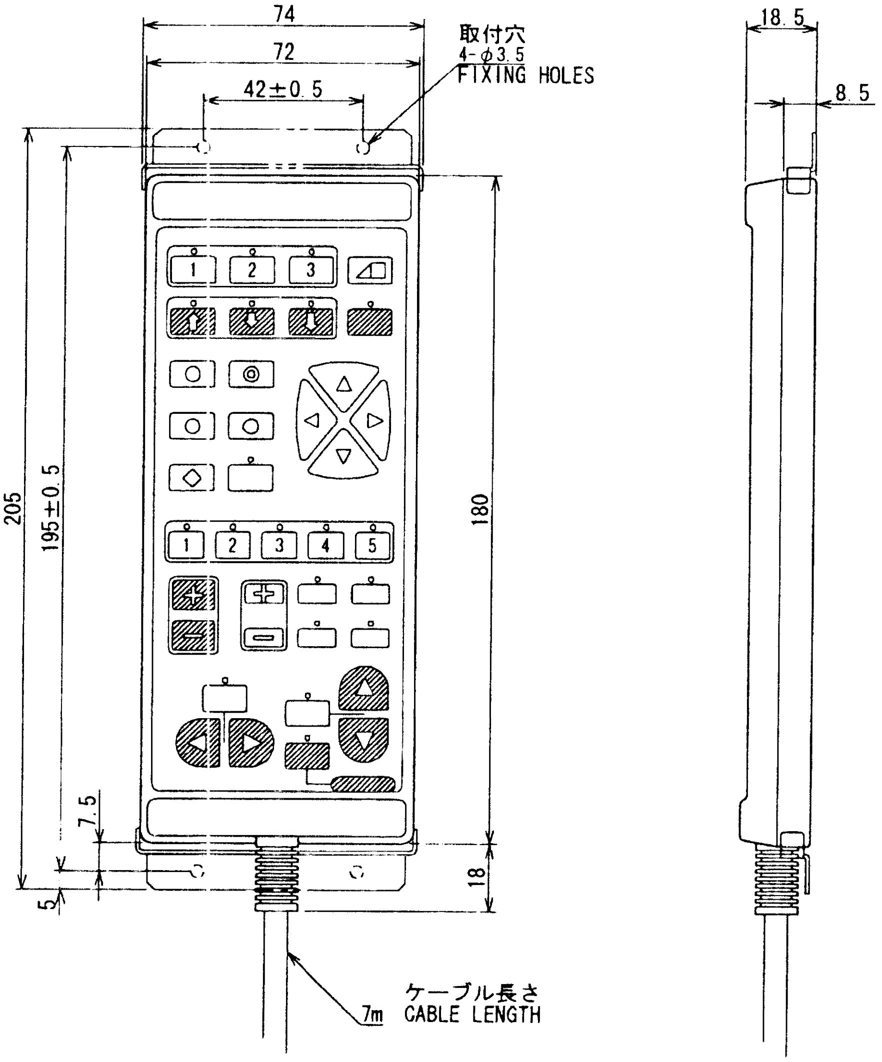

注記
1）指定なき寸法公差は表1による。

NOTE
1. TABLE 1 INDICATES TOLERANCE OF DIMENSIONS.

DRAWN Dec. 26 '00 T. YAMASAKI		TITLE CSH-116/135
CHECKED Dec 27 '00 Y. Kim		名称 リモート箱
APPROVED Dec 27 '00 Y. K	CSH-53/33/73/58 CSH-21/22/23/23F	外寸図
SCALE 1/2 — MASS 1.5 kg ±10%		NAME REMOTE CONTROL BOX
DWG No. C1286-G02- D		OUTLINE DRAWING

FURUNO ELECTRIC CO., LTD.

寸法区分(mm) DIMENSION	公差(mm) TOLERANCE
0 < L ≦ 50	±1.5
50 < L ≦ 100	±2.5
100 < L ≦ 500	±3
500 < L ≦ 1000	±4

表1 TABLE 1

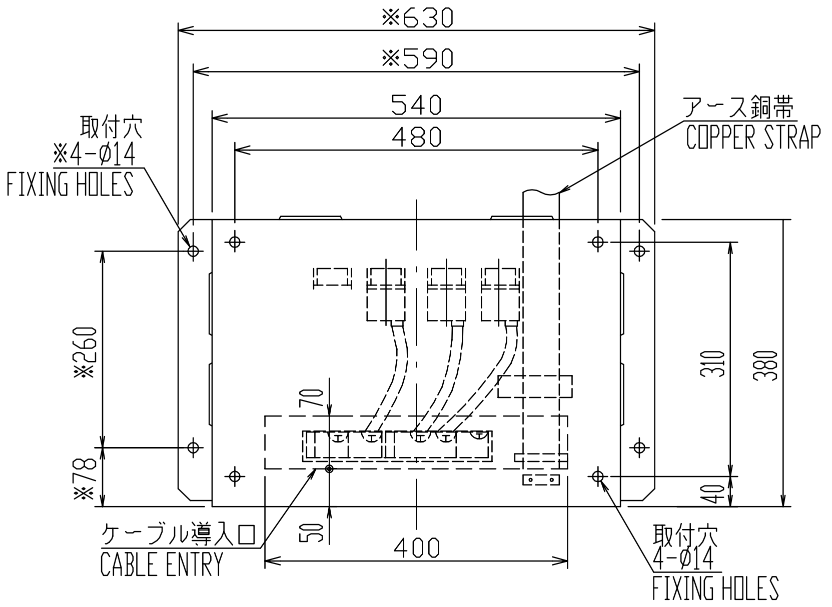

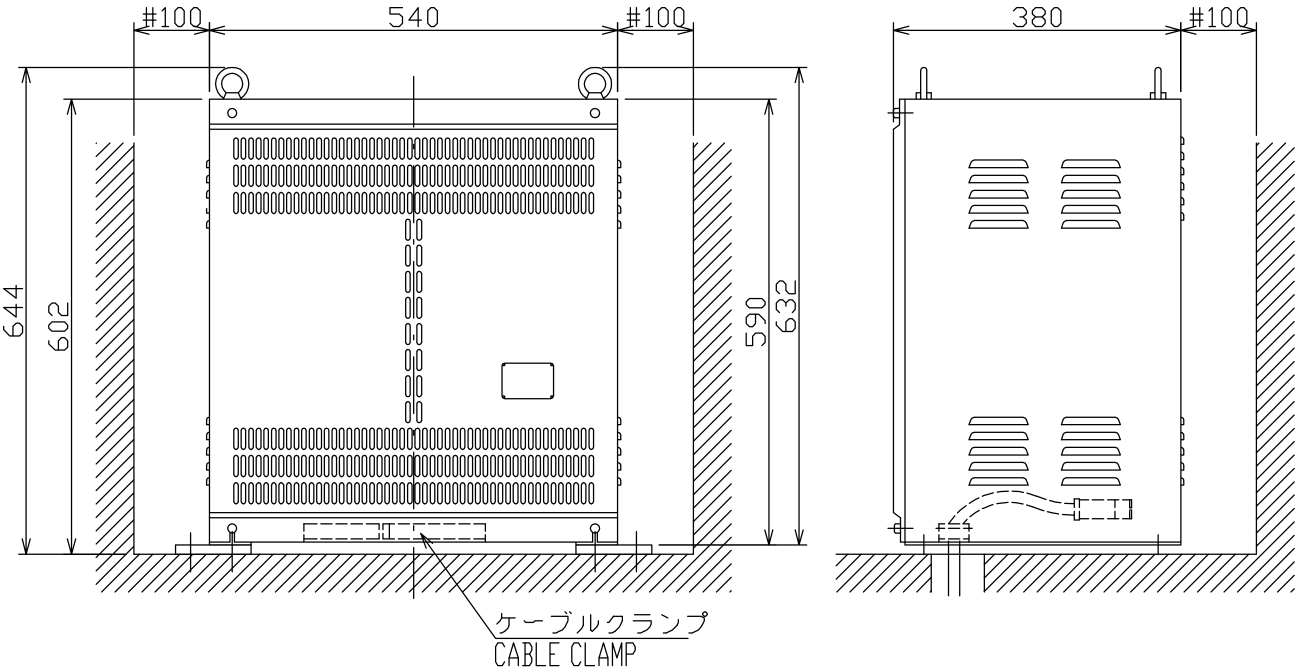

注記
1）指定なき寸法公差は表１による。
2）#：推奨するサービス空間寸法。
3）※印は外足取付時の寸法（取外し可）。

NOTES
1. TABLE 1 INDICATES TOLERANCE OF DIMENSIONS.
2. #: RECOMMENDED SERVICE CLEARANCE.
3. ※: MOUNTING DIMENSIONS OF OUTSIDE LEGS (REMOVABLE).

型式 MODEL	質量 MASS (kg±10%)
CSH-310	96
CSH-810	82

表2 TABLE 2

DRAWN	Oct. 17 '03 T.YAMASAKI	TITLE	CSH-310/K,CSH-810
CHECKED	Oct. 20 '03 T.MATSUGUCHI	名称	送振装置
APPROVED	Oct.31'03 T. Matsuguchi	CSH-20/21/23/24	外寸図
SCALE 1/10	MASS 表2参照 TABLE 2	NAME	TRANSMITTER UNIT
DWG.No.	C1257-018- G		OUTLINE DRAWING

FURUNO ELECTRIC CO., LTD.

FURUNO

D-6

寸法区分（mm） DIMENSION	公差（mm） TOLERANCE
L≦50	±1.5
50<L≦100	±2.5
100<L≦500	±3

表1 TABLE 1

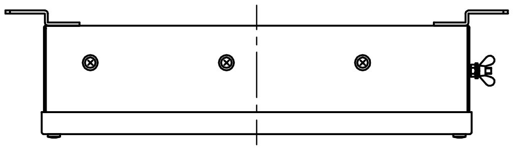

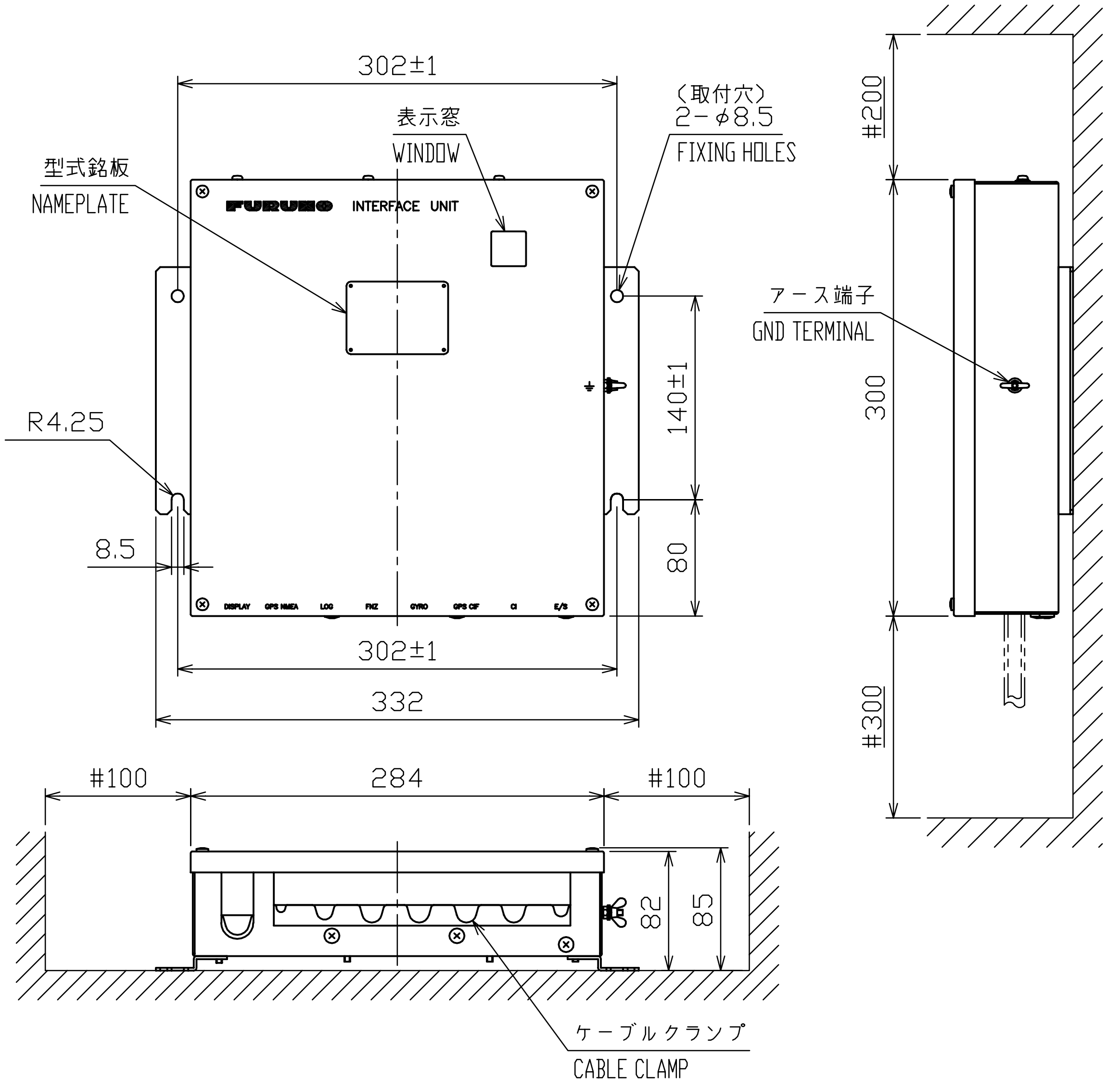

注　記　1）＃印寸法は最小サービス空間寸法とする。
2）指定外の寸法公差は表1による。
3）取付用ネジはM8ボルト、またはコーチボルト呼び径8を使用のこと。

NOTE
1. #: RECOMMENDED SERVICE CLEARANCE.
2. TABLE 1 INDICATES TOLERANCE OF DIMENSIONS.
3. USE M8 BOLTS OR COACH SCREWS φ8 FOR FIXING THE UNIT.

DRAWN Dec. 10 '02 T.YAMASAKI		TITLE	CS-120A
CHECKED Dec. 10 '02 Y.KIMURA		名称	インターフェイス
APPROVED Dec. 10. '02 Y. Kimura	CSH-23/24		外寸図
SCALE 1/5	MASS 4.5 ±10% kg	NAME	INTERFACE
DWG.No. C1310-G02- A	10-064-200G-0		OUTLINE DRAWING

FURUNO ELECTRIC CO., LTD.

FURUNO

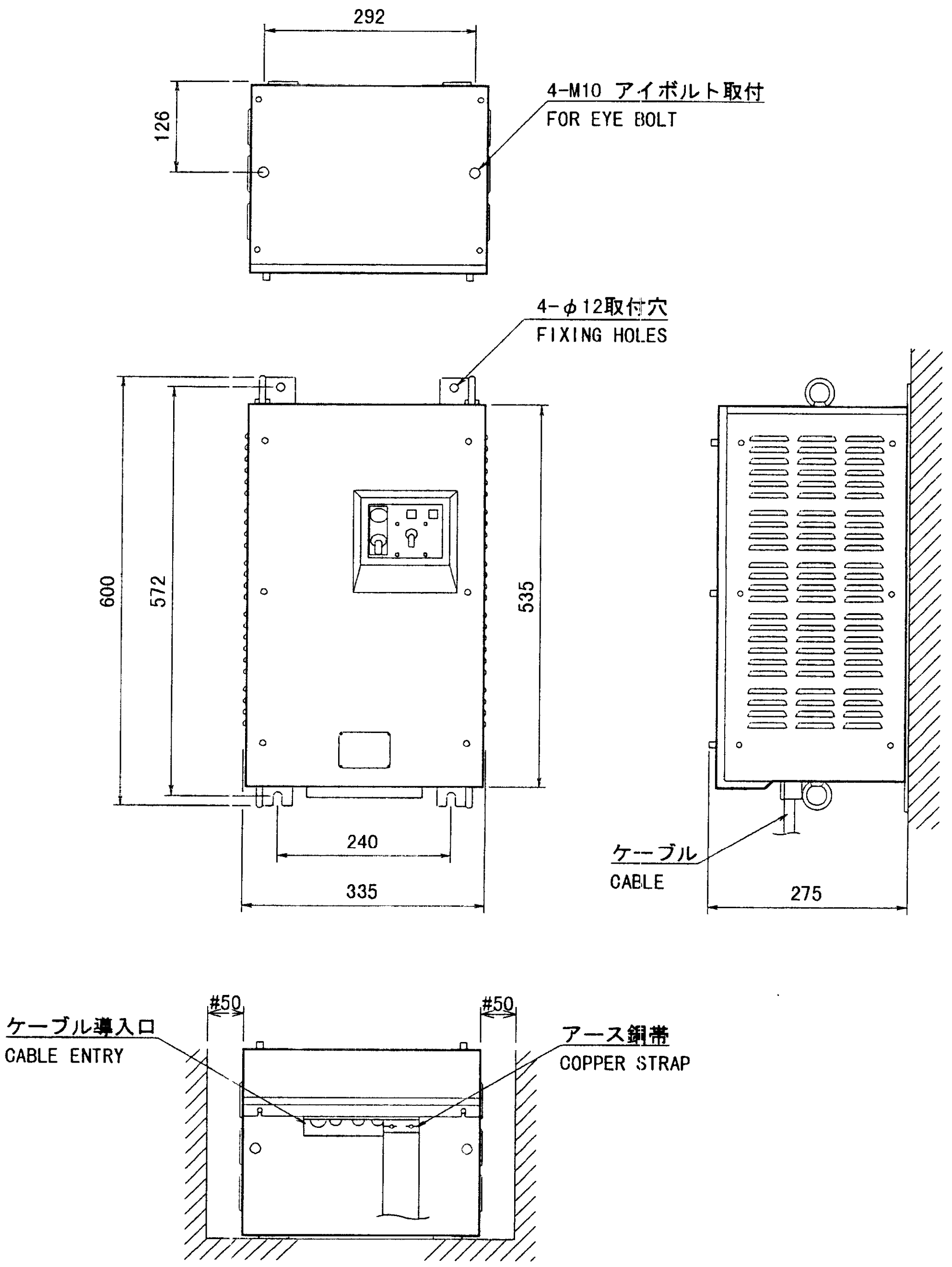

#：推奨するサービス空間寸法。
#: RECOMMENDED SERVICE CLEARANCE.

DRAWN June 26 '00 T.YAMASAKI	TITLE	CSH-880
CHECKED June 26 '00 Y.Kim	名称	電源装置
APPROVED June 26 '00 Y.Kim		外寸図
SCALE 1/10 MASS 56 kg	NAME	POWER UNIT
DWG. No. C1265-011- B		OUTLINE DRAWING

FURUNO ELECTRIC CO., LTD.

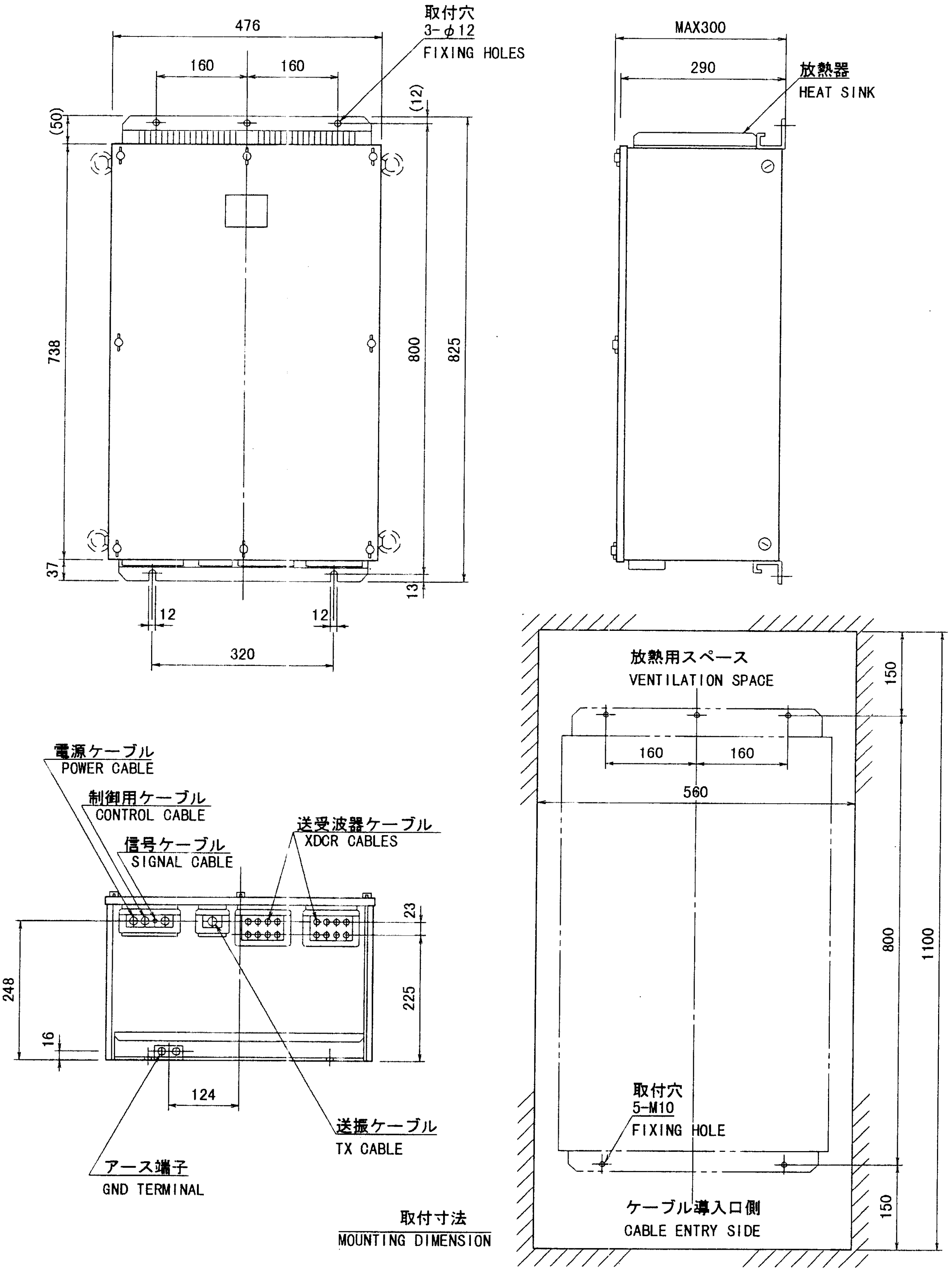

DRAWN June 26 '00 T. YAMASAKI	TITLE	CSH-820
CHECKED June 26 '00 T. Kimura	名称	受信装置
APPROVED June 26 '00 T. Kimura		外寸図
SCALE 1/10 / MASS 50 kg	NAME	RECEIVER UNIT
DWG. No. C1265-010- B		OUTLINE DRAWING

FURUNO ELECTRIC CO., LTD.

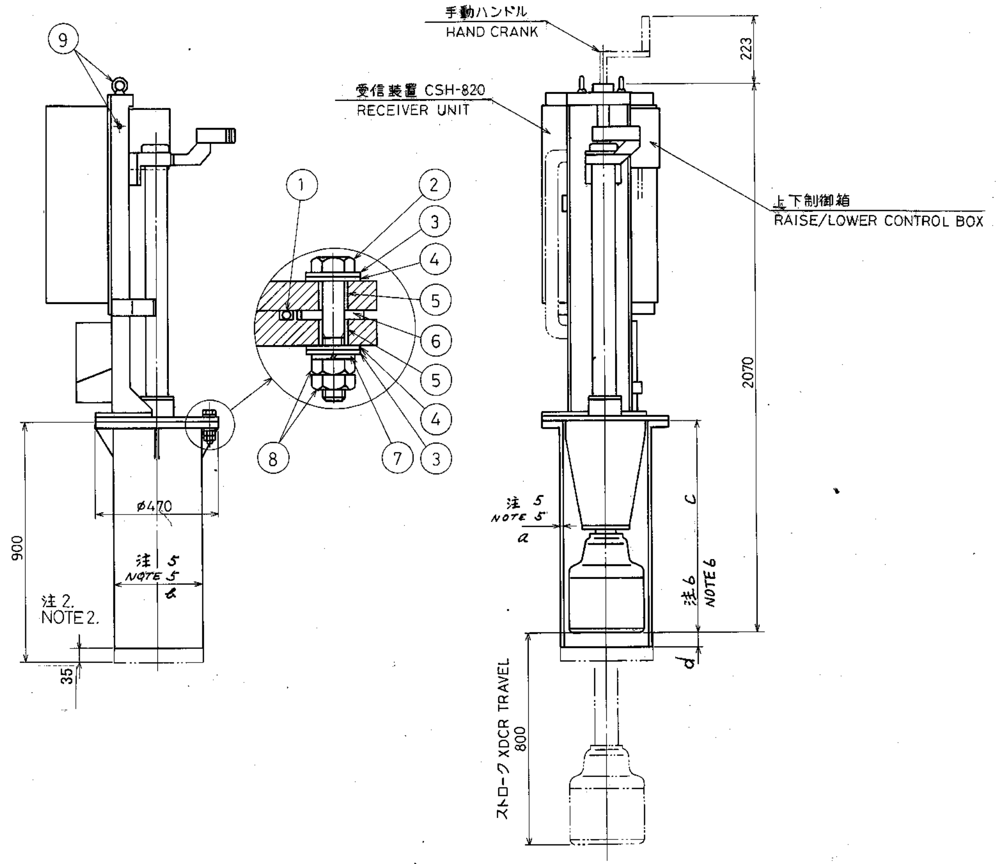

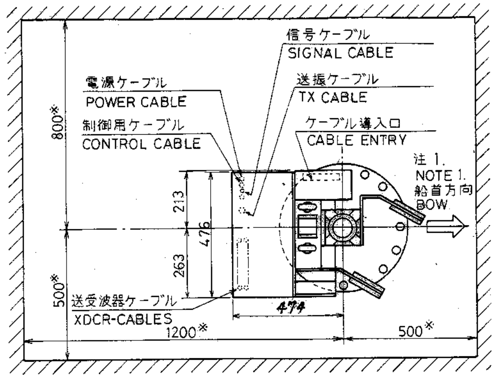

注
1. 架台フランジ上の矢印⇨を船首方向に一致させる事。これが出来ない時は、装備後、指示装置での船首線調整が必要。
2. 装備位置に応じて35mm以内で切断の事。
3. 保守点検のため最小限 図中※印のスペースを設ける事。
4. 装備後、アイナット及び架台上部側面穴⑨を利用して振れ止め用ステーを張る事。

NOTE
1. THE BOW MARK⇨ON GALLOWS FLANGE SHOULD FACE SHIP'S BOW. IF NOT, HEADING ADJUSTMENT SHOULD BE MADE AT INSTALLATION.
2. **CUT THE TANK WITHIN 35MM IN LENGTH ACCORDING TO INSTALATION SITE.**
3. DIMENSIONS MARKED '※' SHOW MINIMUM MAINTENANCE SPACE.
4. STRETCH STAYS FOR ANTI-VIBRATION BY USING TWO EYE-NUTS AND SIDE HOLE⑨ AFTER INSTALLATION.

品番 ITEM	品名 NAME	材質 MATERIAL	数量 Q'TY	図番 DWG.NO.	摘要 REMARKS
9	アイナット EYE-NUT	SS41	2	M20	
8	六角ナット HEX. NUT	SUS304	32	M20	
7	バネ座金 SPRING WASHER	SUS304	16	FOR M20	
6	絶縁板(1) GASKET(1)	CR	1		
5	絶縁パッキン INSULATION PACKING(2)		25	MS-1000-68	
4	絶縁板(2) GASKET(2)		25	SHG-0004	
3	平座金 FLAT WASHER	SUS304	25	SHG-0002	
2	六角ボルト HEX. BOLT	SUS304	9	M20×120	
1	Oリング O-RING		1	JIS B2401 P355	

注5
NOTE 5

タンク肉厚 THICKNESS OF TANK	a	b
9mm (オプション) OPTION	9±0.4	φ334
12mm (標準) STANDARD	12±1.0	φ340

注6
NOTE 6

周波数 / 寸法	c	d
75/81kHz	815	50
88/94/107kHz	783	82

重量375kgは受信装置を含まない。
Weight 375kg does not include the weight of receiver unit.

承認 APPROVED	JULY·10·'87 T. NAKANO	三角法 THIRD ANGLE PROJECTION		名称 TITLE	上下装置外寸図 CSH-8080 CSH-81080 HULL UNIT (ストローク XDCR TRAVEL 800mm)
検図 CHECKED	July·10·'87 T. KODA	尺度 SCALE	1/20		
製図 DRAWN	July·3·'87 T. MIYOSHI	重量 WEIGHT	375 kg	図番 DWG.NO.	C1265-007-J

FURUNO ELECTRIC CO., LTD.

FURUNO

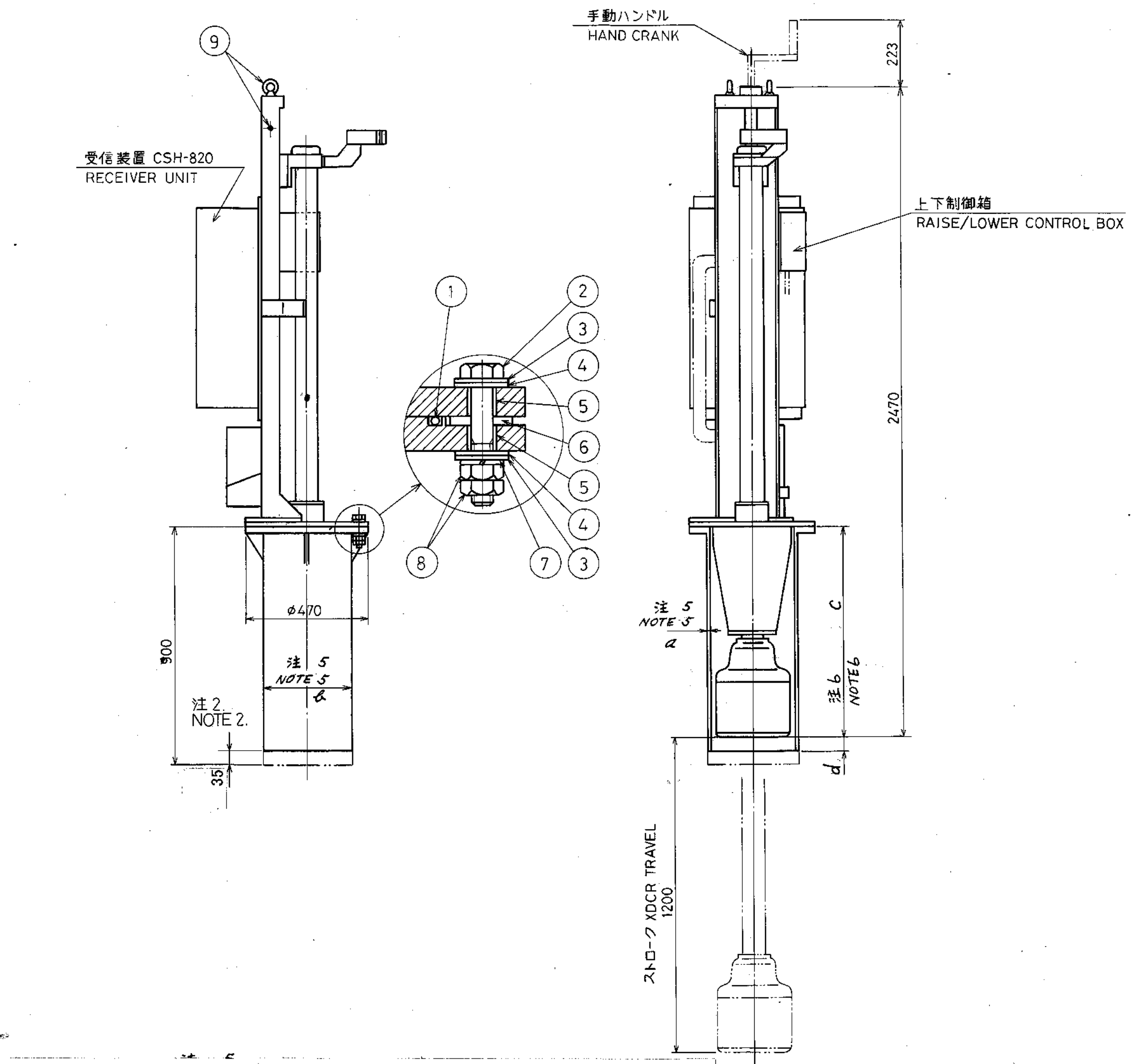

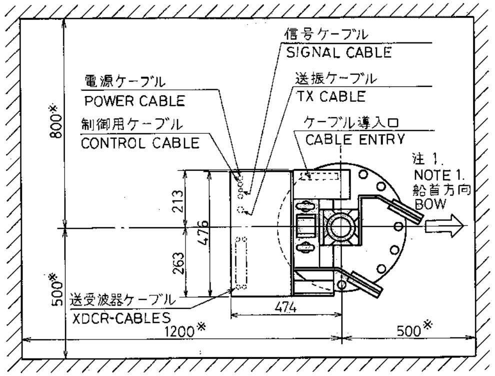

注
1. 架台フランジ上の矢印⇨を船首方向に一致させる事。これが出来ない時は、装備後、指示装置での船首線調整が必要。
2. 装備位置に応じて35mm以内で切断の事。
3. 保守点検のため最小限 図中※印のスペースを設ける事。
4. 装備後、アイナット及び架台上部側面穴⑨を利用して振れ止め用ステーを張る事。

NOTE
1. THE BOW MARK⇨ON GALLOWS FLANGE SHOULD FACE SHIP'S BOW. IF NOT, HEADING ADJUSTMENT SHOULD BE MADE AT INSTALLATION.
2. **CUT THE TANK WITHIN 35MM IN LENGTH ACCORDING TO INSTALATION SITE.**
3. DIMENSIONS MARKED "※" SHOW MINIMUM MAINTENANCE SPACE.
4. STRETCH STAYS FOR ANTI-VIBRATION BY USING TWO EYE-NUTS AND SIDE HOLE⑨ AFTER INSTALLATION.

品番 ITEM	品名 NAME	材質 MATERIAL	数量 Q'TY	図番 DWG. NO.	摘要 REMARKS
9	アイナット EYE-NUT	SS41	2	M20	
8	六角ナット HEX. NUT	SUS304	32	M20	
7	バネ座金 SPRING WASHER	SUS304	16	FOR M20	
6	絶縁板(1) GASKET(1)	CR	1		
5	絶縁パッキン INSULATION PACKING(2)		25	MS-1000-68	
4	絶縁板(2) GASKET(2)		25	SHG-0004	
3	平座金 FLAT WASHER	SUS304	25	SHG-0002	
2	六角ボルト HEX. BOLT	SUS304	9	M20 x 120	
1	Oリング O-RING		1	JIS B2401 P355	

注5
NOTE 5

タンク肉厚 THICKNESS OF TANK	a	b
9mm (オプション) OPTION	9±0.4	φ334
12mm (標準) STANDARD	12±1.0	φ340

注6
NOTE 6

寸法 / 周波数	c	d
75/81kHz	815	50
88/94/107kHz	783	82

重量390kgは受信装置を含まない。
Weight 390kg does not include the weight of receiver unit.

承認 APPROVED	JULY. 10. '87 T. NAKANO	三角法 THIRD ANGLE PROJECTION		名称 TITLE	上下装置外寸図 HULL UNIT CSH-8120 CSH-81120 (ストローク XDCR TRAVEL 1200mm)
検図 CHECKED	July. 10. '87 T. KODA	尺度 SCALE	1/20		
製図 DRAWN	July. 3. '87 T. MIYOSHI	重量 WEIGHT	390 kg	図番 DWG. NO.	C1265-008-J

FURUNO ELECTRIC CO., LTD.

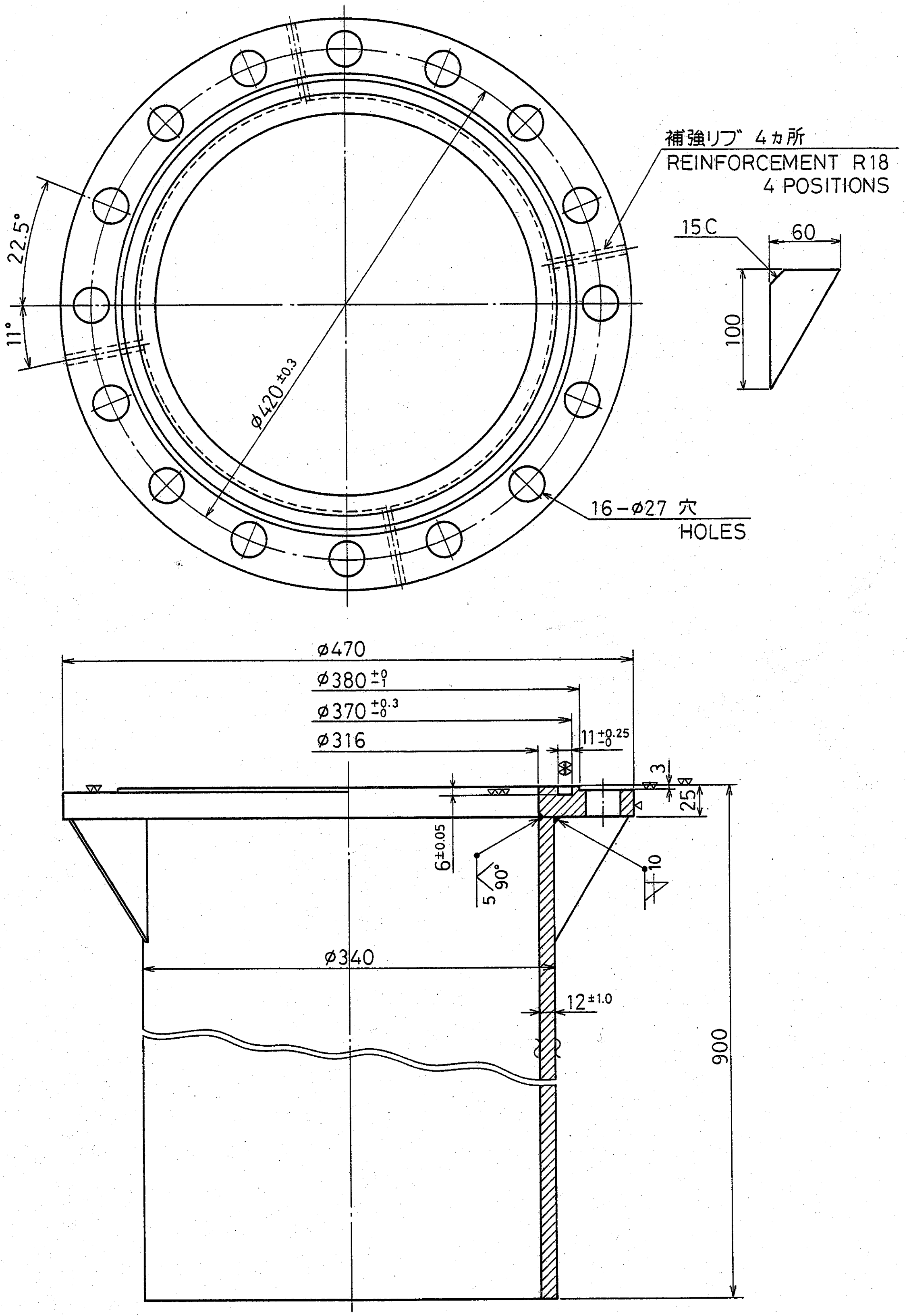

CSH-70/80/50/60

品番 ITEM	品名 NAME	材質 MATERIAL	数量 Q'TY	図番 DWG. NO.	摘要 REMARKS

承認 APPROVED	DEC. 1 .'87 T. NAKANO	三角法 THIRD ANGLE PROJECTION		名称 TITLE	格納タンク外観図 RETRACTION TANK
検図 CHECKED	Dec. 1 .'87 T. KODA	尺度 SCALE	1/5		
製図 DRAWN	DEC. 1 .'87 N. SAITO	重量 WEIGHT	100 kg	図番 DWG. NO.	C1260-048-A

FURUNO ELECTRIC CO., LTD.

FURUNO

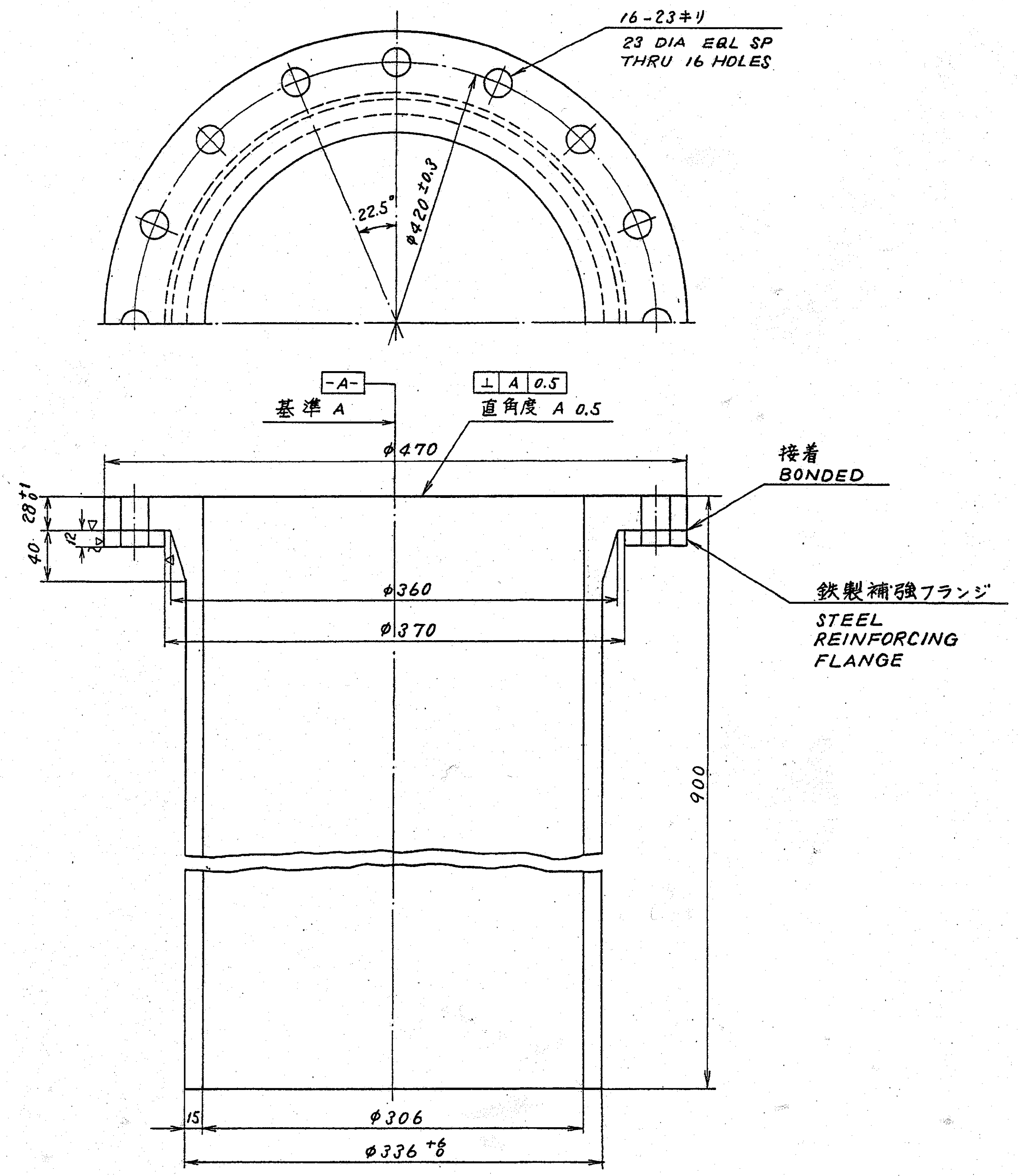

小型上下装置用
SH-754B/884B
SH-164B CSH-7080

品番 ITEM	品名 NAME	材質 MATERIAL	数量 Q'TY	図番 DWG.NO.	摘要 REMARKS

承認 APPROVED	MAY. 30. '80	三角法 THIRD ANGLE PROJECTION		名称 TITLE	FRP 格納タンク外観図 FRP RETRACTION TANK
検図 CHECKED	MAY. 30. '80	尺度 SCALE	1/5		
製図 DRAWN	May. 26, '80	重量 WEIGHT	30 kg	図番 DWG.NO.	C1217-086-C

FURUNO ELECTRIC CO., LTD.

Ⓐ 鉄製格納タンク
STEEL RETRACTION TANK

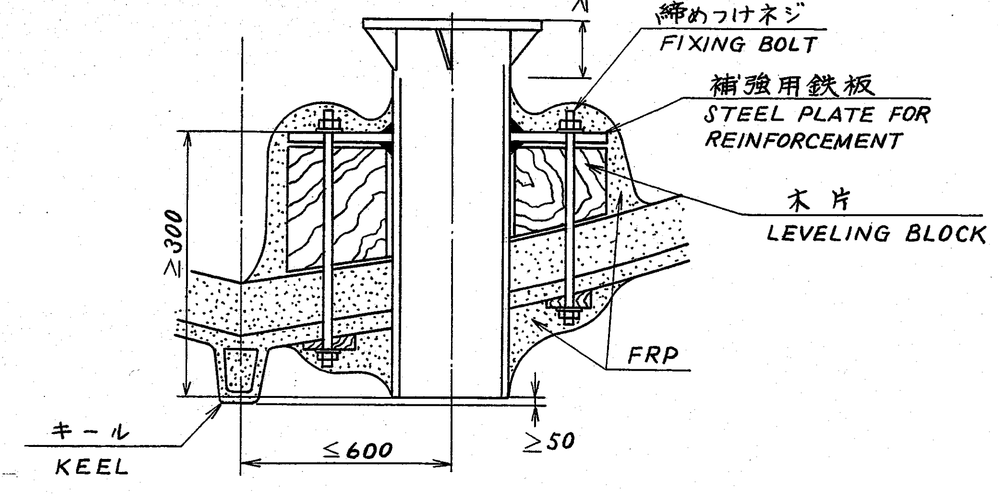

Ⓑ FRP製タンク
FRP RETRACTION TANK

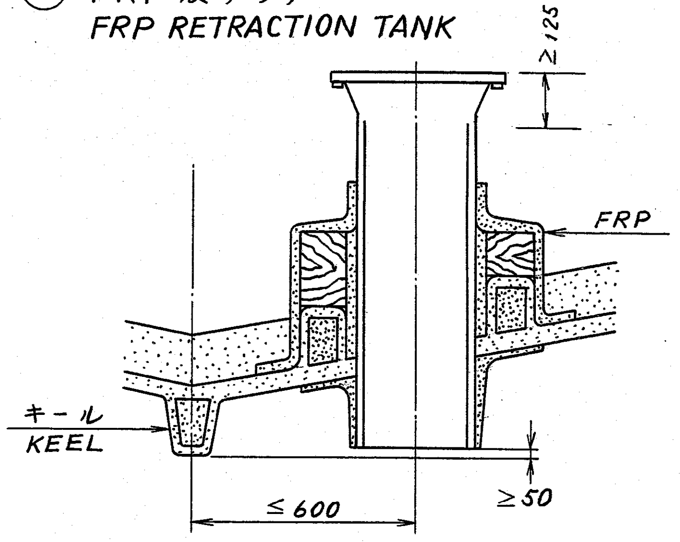

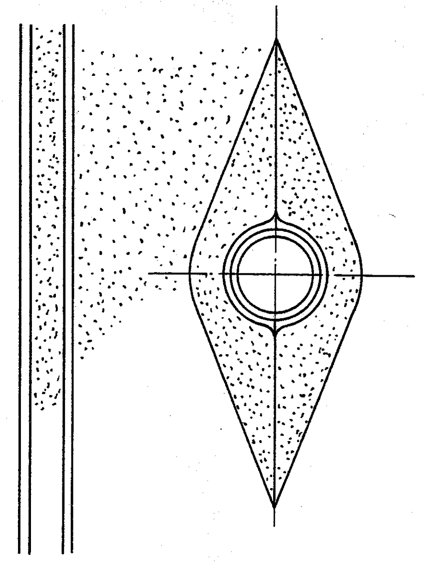

1. 格納タンクの装備は次の条件を満すこと。
   1) 取付位置は船首から1/3（小型船の場合は1/2）程度。
   2) キールより600 mm以内。
   3) フランジのボルト締めのためフランジ下面と障害物（二重船底等）との間に125 mm以上のスペースがあること。
   4) タンクの先端はキールの先端より50 mm上であること。
   5) タンクのフランジ面は標準走航時に水平であること。

2. Ⓐの場合、補強用鉄板は溶接、締め付けボルトは、φ12～20 mmを8本以上使用の事。

3. 浸水を防ぐため充分にFRPで必要個所を塗り固める。特にタンク回りは流線型に成型し水による抵抗及び気泡発生を最少限におさえる様努めること。

4. 上下装置本体は上部で振れ止め対策を行なうこと。

注：強度及び水密性について、船主、造船所担当者、施工者の間で充分協議し、取付位置、方法、材料等を決定すること。

1. SATISFY THE FOLLOWING CONDITIONS IN DECIDING THE RETRACTION TANK MOUNTING SITE.
   1) ABOUT 1/3 (1/2 IN CASE OF SMALL BOAT) OF SHIP'S LENGTH FROM BOW.
   2) WITHIN ≤600mm FROM KEEL LINE.
   3) ALLOW CLEARANCE OF MORE THAN 125mm BENEATH TANK FLANGE TO FACILITATE BOLTING.
   4) KEEP LOWEST END OF TANK 50mm ABOVE BOTTOM OF KEEL.
   5) TANK FLANGE SHOULD BE EXACTLY HORIZONTAL WHEN SHIP IS NORMALLY TRIMMED.

2. IN INSTALLATION Ⓐ, STEEL PLATE FOR REINFORCEMENT SHOULD BE WELDED AND USE MORE THAN 8 FIXING BOLTS (ø12 - 20mm).

3. APPLY FRP AROUND THE PARTS OF THE TANK PROTRUDING FROM THE HULL BOTTOM FOR SUFFICIENT REINFORCEMENT. MAKE A FAIRING BLOCK WITH FRP AROUND THE PROTRUDING PARTS OF THE TANK TO MINIMIZE THE EFFECT OF AERATION.

4. IT IS ADVISABLE TO PROVIDE REINFORCEMENT ANGLES BETWEEN THE HULL UNIT AND THE ADJACENT BULKHEAD OR CEILING.

CAUTION: DISCUSSION SHOULD TAKE PLACE AND AGREEMENT BE REACHED WITH THE SHIPYARD FOR SUFFICIENT REINFORCEMENT AND WATERTIGHTNESS OF THE HULL TO COMPLY WITH THE REGULATIONS CONCERNED.

品番 ITEM	品名 NAME	材質 MATERIAL	数量 Q'TY	図番 DWG. NO.	摘要 REMARKS

承認 APPROVED	· ·	三角法 THIRD ANGLE PROJECTION		名称 TITLE	格納タンク船底装備図（FRP船） RETRACTION TANK INSTALLATION ON FRP HULL
検図 CHECKED	· ·	尺度 SCALE	1/20		
製図 DRAWN	JUNE 16 '80	重量 WEIGHT	kg	図番 DWG. NO.	C1217-092-B

Ⓐ キール上（突出） ON KEEL (PROJECTED)

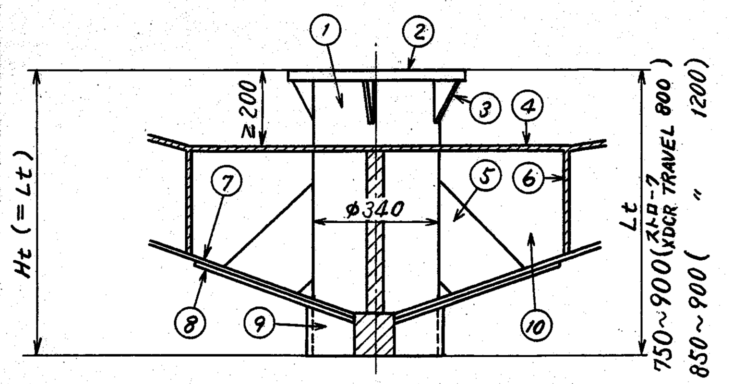

Ⓑ キール横（突出） OFF KEEL (PROJECTED)

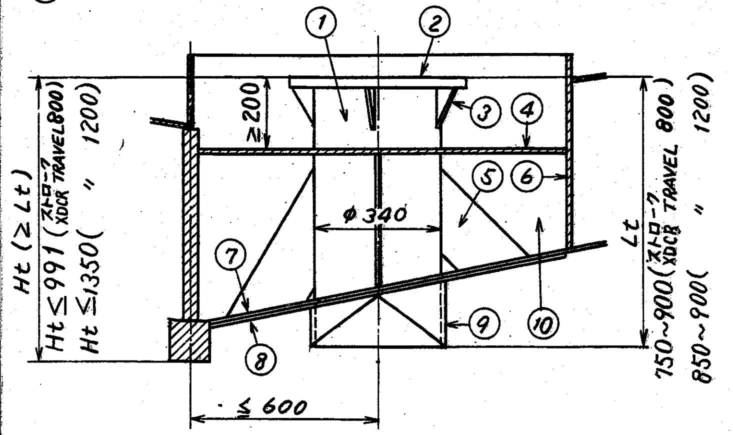

Ⓒ キール横（非突出） OFF KEEL (NOT PROJECTED)

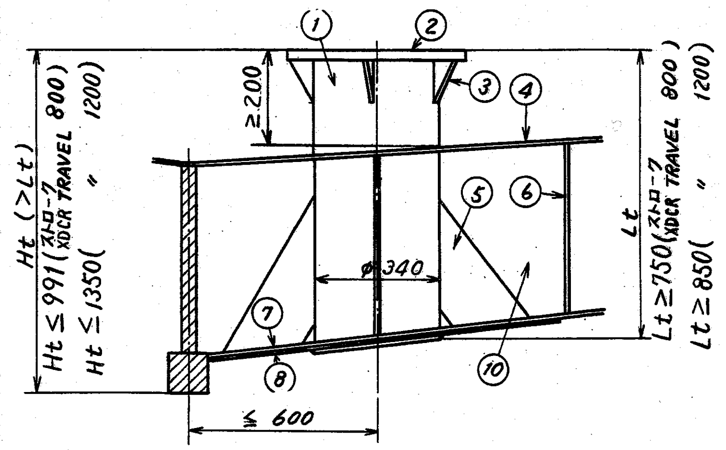

Ⓓ 整流覆 FAIRING PLATE

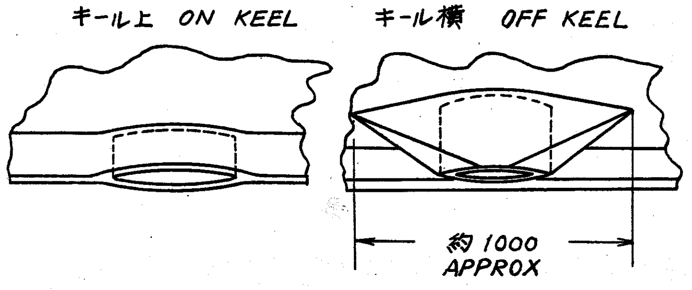

装備手順

1. 船底板及び二重船底板に φ340 の穴を明ける。

2. 次の点に注意して格納タンクを船底板に連続スミ肉溶接する。
   * タンクのフランジ面が標準走航時に水平になる事。
   * フランジ面のボルト穴の中心が船首方向になる事。
   * 送受波器を突出させた時に送受信ビームがキールで遮られないように、フランジ面のキールよりの高さ "Ht" を図示の範囲内にする事。

   * タンク下端がキールより下に出ないようにタンクの長さ "Lt" は "Ht" より短くする。且つ、送受波器がタンク下端より出ないように図示の範囲内にする。（標準支給長 900mm）

3. 格納タンクの周囲に外径 φ1000 以上のダブリング⑧を取り付ける。又、突出装備（Ⓐ、Ⓑ）の場合には整流覆⑨（D図）を取り付ける。ダブリングと整流覆には、船底板と同じ材質、肉厚のものを使用する事。

4. タンク周囲に油槽がある場合には、隔壁⑥をめぐらせ、コファダム⑩を設ける事。

5. タンク周囲4ヶ所以上に補強板⑤を溶接する。

6. 上下装置本体を格納タンクにボルト締めするのに必要なスペースとして、フランジ面の位置が2重船底板より 200 mm 以上離す。2重船底が高い船にはⒷ図の方法で2重船底板を下げ、スペースを確保すること。

INSTALLATION METHOD OF RETRACTION TANK

1. Cut out ∅340 hole on hull and inner hull plate.

2. Install tank to hull plate with fillet welding taking the following points into account.
   * Flange face is exactly horizontal at normal Ship's trim.
   * One of 24 bolt holes on flange is faced dead ahead.
   * Allow height of flange face from keel bottom "Ht" mentioned in the drawings, otherwise transducer beam is blocked by the keel when transducer is fully lowered.
   * Tank's length "Lt" should be less than "Ht". If not so, bottom end of tank is placed below keel level. "Lt" is also limited as shown in the drawings so that the transducer can be fully retracted in tank. (The tank is supplied with 900 mm long as standard.)

3. Fit doubling plate ⑧ of outer dia. ∅1000 around the tank on hull plate. Fit fairing plate ⑨ referring to the drawing Ⓓ for installation method Ⓐ and Ⓑ. Use same material and thickness of doubling and fairing plate as hull plate.

4. Provide cofferdam around the tank in order to isolate the tank from the oil tank.

5. Install 4 pcs. of reinforcement plates between the tank and the hull plate.

6. Allow clearance of more than 200mm below the flange face for easy bolting. Sink the inner hull plate as shown in the drawing Ⓑ for high inner hull plate.

品番 ITEM	品名 NAME	材質 MATERIAL	数量 Q'TY	図番 DWG. NO.	摘要 REMARKS
10	コファダム COFFERDAM				
9	整流覆 FAIRING PLATE				
8	ダブリング DOUBLING				
7	船底板 HULL PLATE				
6	油槽隔壁 BULKHEAD				
5	補強板 REINFORCEMENT PLATE				
4	二重船底板 INNER HULL PLATE				
3	補強リブ REINFORCEMENT RIB				
2	タンクフランジ TANK FLANGE				
1	格納タンク RETRACTION TANK				

CSH-70

承認 APPROVED	NOV. 12, '85	三角法 THIRD ANGLE PROJECTION	名称 TITLE 格納タンク装備要領図（鋼船） INSTALLATION METHOD OF RETRACTION TANK (STEEL HULL)
検図 CHECKED	Nov. 12, '85	尺度 SCALE /	
製図 DRAWN	12TH Nov. '85	重量 WEIGHT kg	図番 DWG. NO. C1260-008-E

FURUNO ELECTRIC CO., LTD.

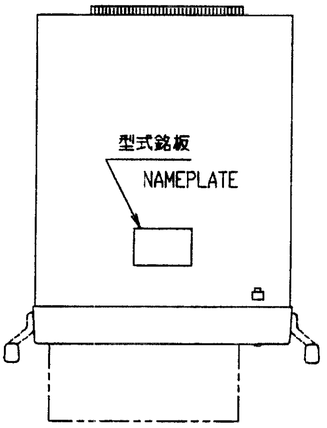

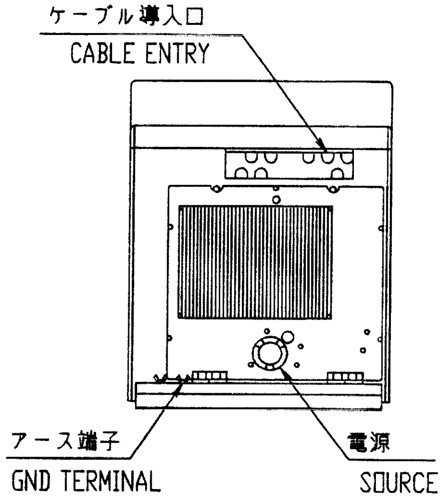

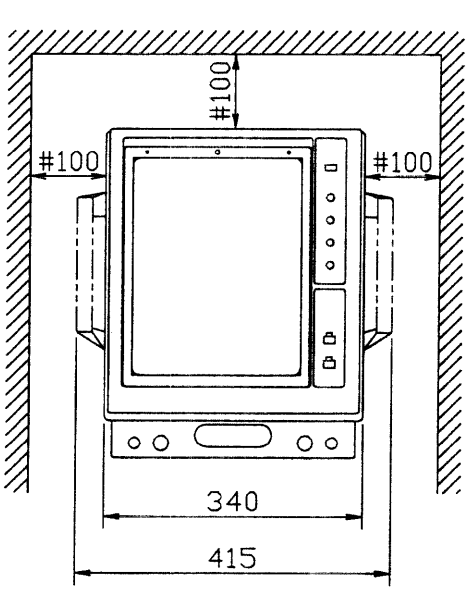

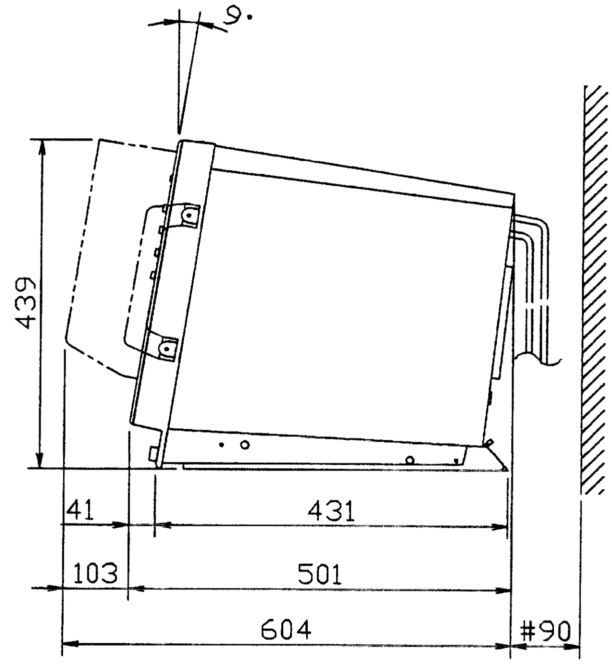

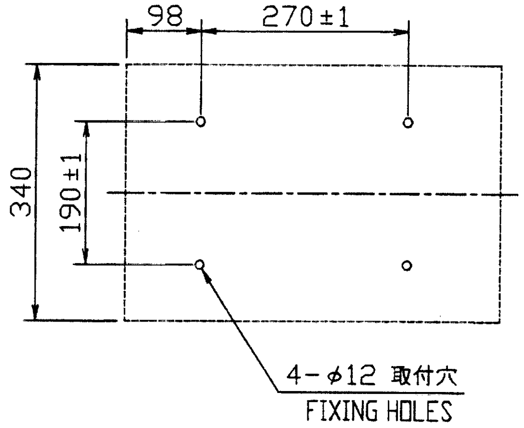

寸法区分（mm） DIMENSION	公差（mm） TOLERANCE
0＜L≦50	±1.5
50＜L≦100	±2.5
100＜L≦500	±3
500＜L≦1000	±4

表1 TABLE 1

注記
1）#：推奨する最小サービス空間寸法。
2）指定なき寸法公差は表1による。

NOTE
1. #: RECOMMENDED SERVICE CLEARANCE
2. TABLE 1 INDICATES TOLERANCE OF DIMENSIONS.

DRAWN Jul. 11 '01 T.YAMASAKI	TITLE	CSH-106
CHECKED July 16 '01 Y. K.	名称	リモートディスプレイ
APPROVED July 16 '01 Y. K.		外寸図
SCALE 1/10 MASS 25 ±10% kg	NAME	REMOTE DISPLAY UNIT
DWG.No. C1286-G03- D		OUTLINE DRAWING

FURUNO ELECTRIC CO., LTD.

FURUNO

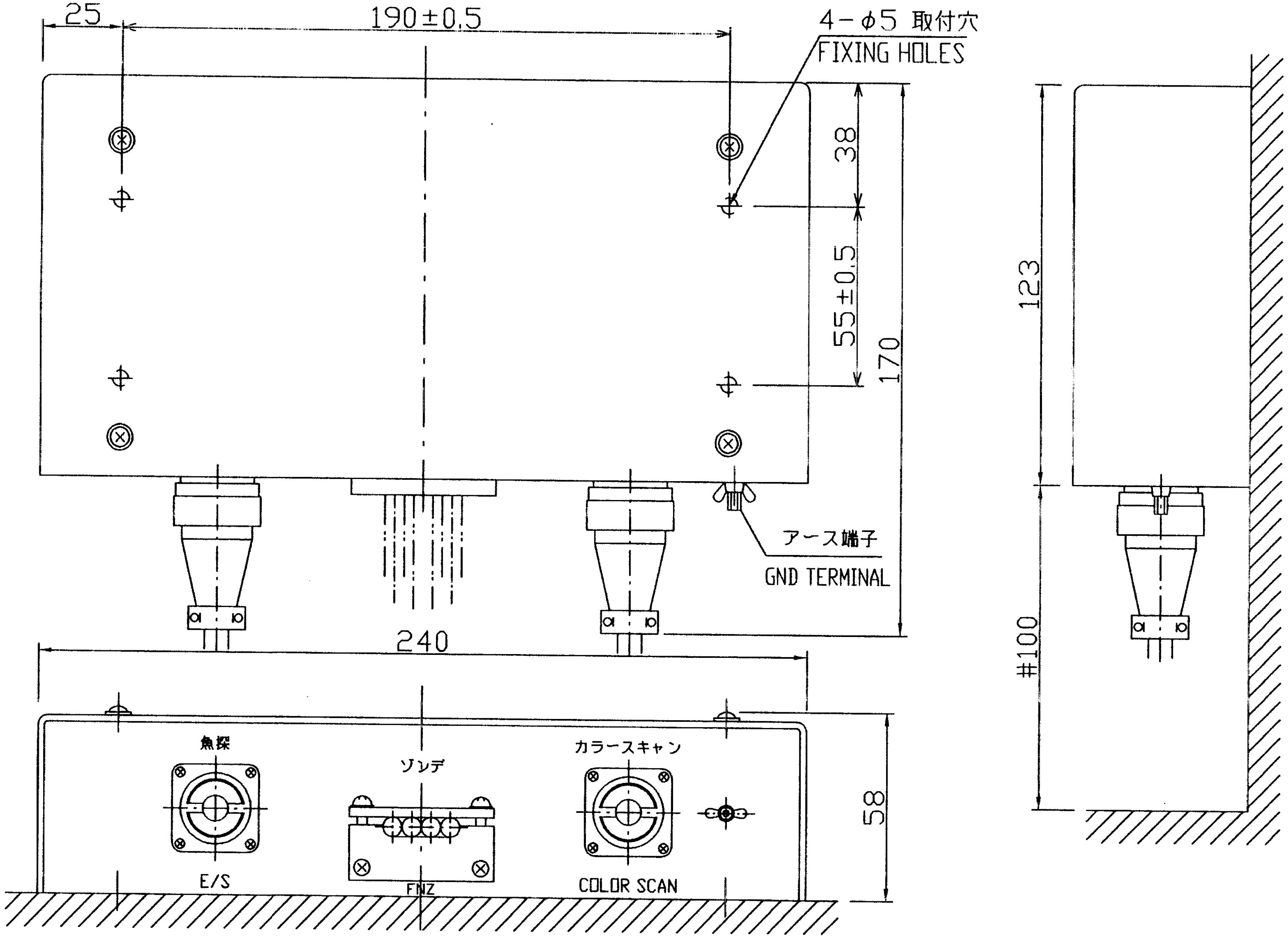

寸法区分(mm) DIMENSION	公差(mm) TOLERANCE
0 < L ≦ 50	±1.5
50 < L ≦ 100	±2.5
100 < L ≦ 500	±3

表1 TABLE 1

注記

1）#：推奨する最小サービス空間寸法。
2）指定なき寸法公差は表1による。

NOTE

1. #: RECOMMENDED SERVICE CLEARANCE.
2. TABLE 1 INDICATES TOLERANCE OF DIMENSIONS.

DRAWN	Jul. 11 '01	T. YAMASAKI	
CHECKED	July 16 '01	Y. Kim	
APPROVED	July 16 '01	T. K.	
SCALE	1/2	MASS	2 ±10% kg
DWG.No.	C1233-007- D		

TITLE	CS-170
名称	ネットゾンデ接続箱
	外寸図
NAME	NET JOINT BOX
	OUTLINE DRAWING

FURUNO ELECTRIC CO., LTD.

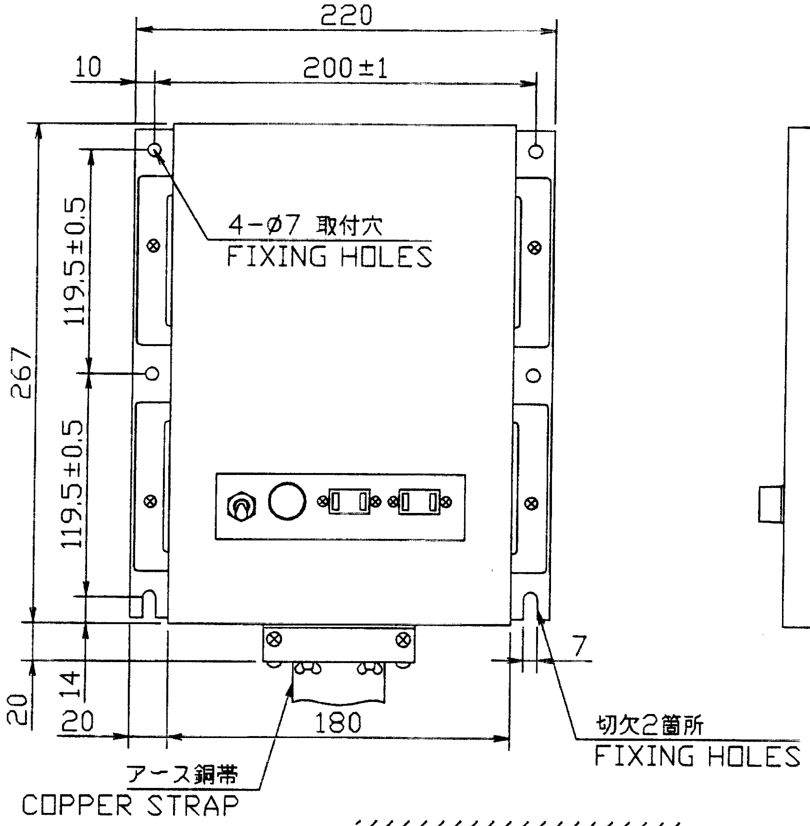

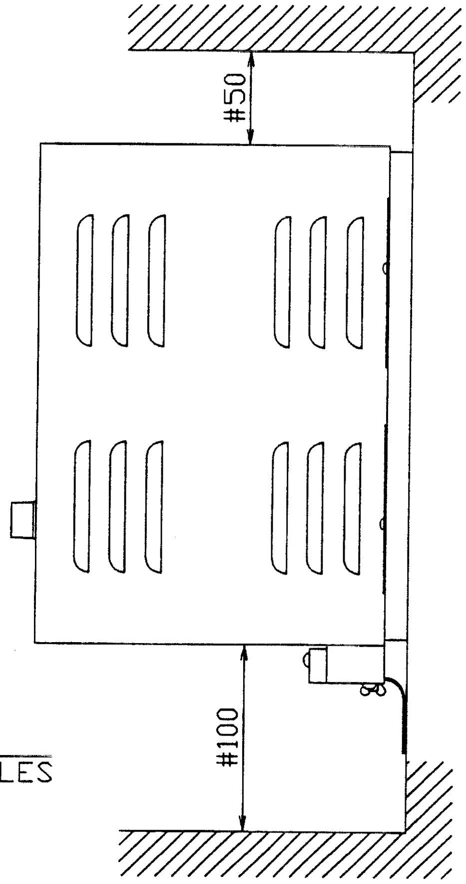

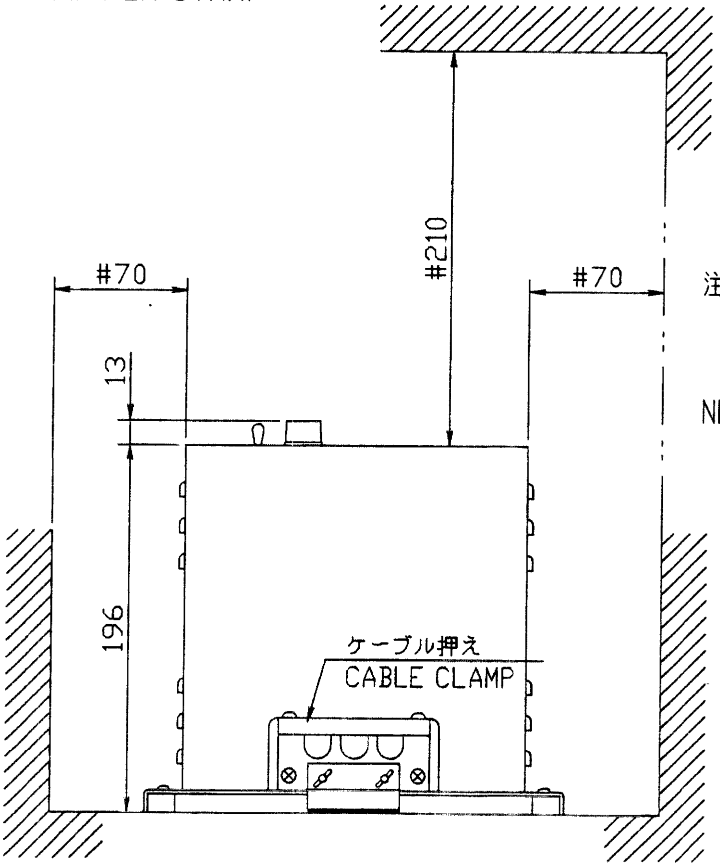

寸法区分(mm) DIMENSION	公差(mm) TOLERANCE
0 < L ≦ 50	±1.5
50 < L ≦ 100	±2.5
100 < L ≦ 500	±3

表1 TABLE 1

注記
1）#：推奨する最小サービス空間寸法
2）指定なき寸法公差は表1による。

NOTE
1. #: RECOMMENDED SERVICE CLEARANCE.
2. TABLE 2 INDICATES TOLERANCE OF DIMENSIONS.

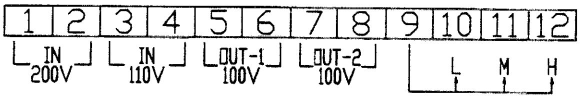

OUT−1または2の出力がAC100Vになるように、10,11または12番端子にジャンパー線をつなぐ。

CONNECT JUMPER WIRE TO 11,12 OR 13 TERMINAL SO THAT 100VAC COMES OUT AT OUT−1 OR 2 TERMINALS.

DRAWN Jul. 16 '01 T.YAMASAKI		TITLE	PT-400
CHECKED July 16 '01 Y.K.		名称	電圧変圧器
APPROVED July 16 '01 Y.K.	CSH SERIES		外寸図
SCALE 1/4 MASS 22 ±10% kg		NAME	STEP-DOWN TRANSFORMER
DWG.No. C0005-002- C			OUTLINE DRAWING

FURUNO ELECTRIC CO., LTD.

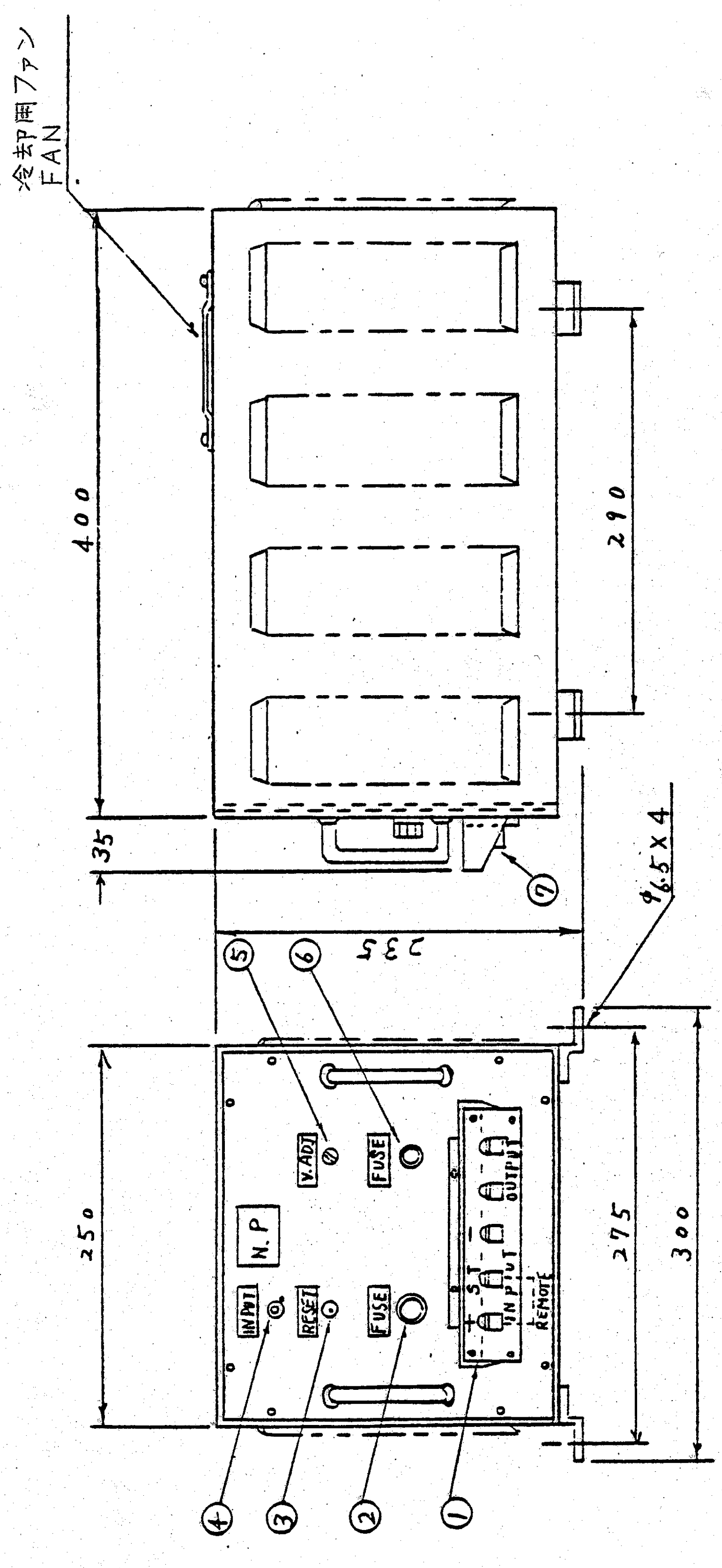

番号 No.	品名 NAME
①	入出力端子板（5端子）TERMINAL BOARD (5P)
②	ヒューズ F1 （入力用）FUSE (FOR INPUT)
③	入力標示ランプ PILOT LAMP
④	過電圧保護回路リセットスイッチ RESET SWITCH FOR OVERVOLT PROTECTOR
⑤	出力電圧調整ボリウム OUTPUT VOLTAGE ADJUSTOR POT.
⑥	ヒューズ F2 （出力用）FUSE (FOR OUTPUT)
⑦	端子カバー TERMINAL BOARD COVER

品番 ITEM	品名 NAME	材質 MATERIAL	数量 Q'TY	図番 DWG. NO.	摘要 REMARKS

承認 APPROVED	AUG. 26. '86 T. NAKANO	三角法 THIRD ANGLE PROJECTION		名称 TITLE	TR2435 350VA トランジスターインバーター TRANSISTORIZED INVERTER
検図 CHECKED	Aug. 26. '86 T. KODA	尺度 SCALE	1/5		
製図 DRAWN	AUG. 26. '86 Tomita	重量 WEIGHT	19 kg	図番 DWG. NO.	C2007-015-C

FURUNO ELECTRIC CO., LTD.

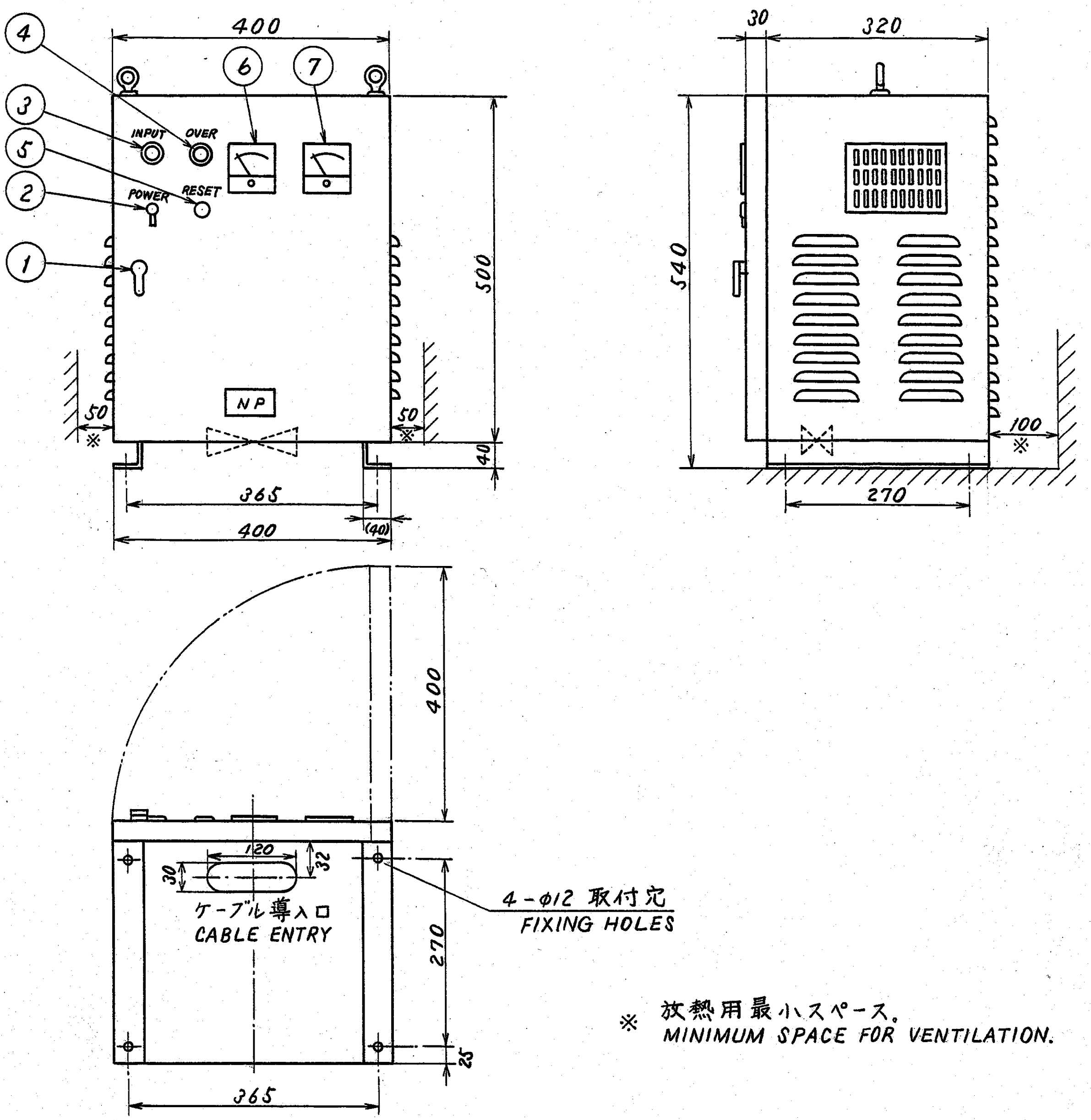

品番 ITEM	品名 NAME	材質 MATERIAL	数量 Q'TY	図番 DWG. NO.	摘要 REMARKS
7	交流出力電流計 AC AMMETER				
6	交流出力電圧計 AC VOLTMETER				
5	復帰スイッチ RESET SWITCH				
4	過電圧表示ランプ OVER VOLT LAMP				
3	入力標示ランプ PILOT LAMP				
2	電源スイッチ POWER SWITCH				
1	取手 DOOR HANDLE				

TR 32100
TR 10100
TR 24100

承認 APPROVED	JUL. 14. '82	三角法 THIRD ANGLE PROJECTION		名称 TITLE	1 kVA トランジスターインバーター外観図 STATIC INVERTER
検図 CHECKED	June. 29. '82	尺度 SCALE	1/10		
製図 DRAWN	June. 29. '82	重量 WEIGHT	54 kg	図番 DWG. NO.	C2007-005-C

FURUNO ELECTRIC CO., LTD.

FURUNO

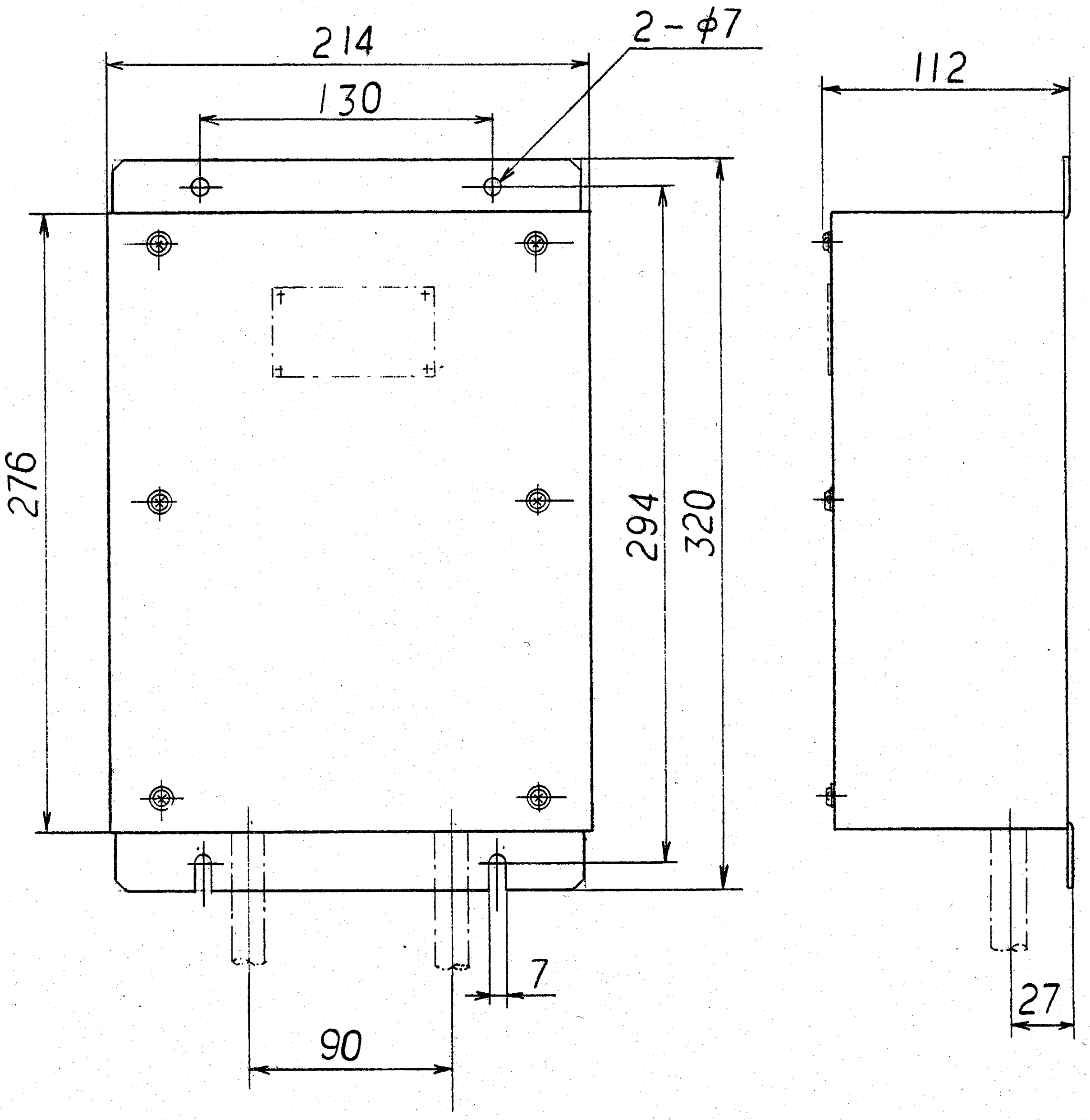

	CSH-80	品番 ITEM	品名 NAME	材質 MATERIAL	数量 Q'TY	図番 DWG. NO.	摘要 REMARKS

承認 APPROVED	Mar. 1. '89 S. Takeyama	三角法 THIRD ANGLE PROJECTION	名称 TITLE: CSH-1400 電流制限箱 SURGE CONTROL BOX
検図 CHECKED	Mar. 1. '89 Sawada	尺度 SCALE: 1/3	
製図 DRAWN	Mar. 1. '89 K. Takeno	重量 WEIGHT: 3 kg	図番 DWG. NO.: C1265-G02-A

No. 001

FURUNO ELECTRIC CO., LTD.

FURUNO

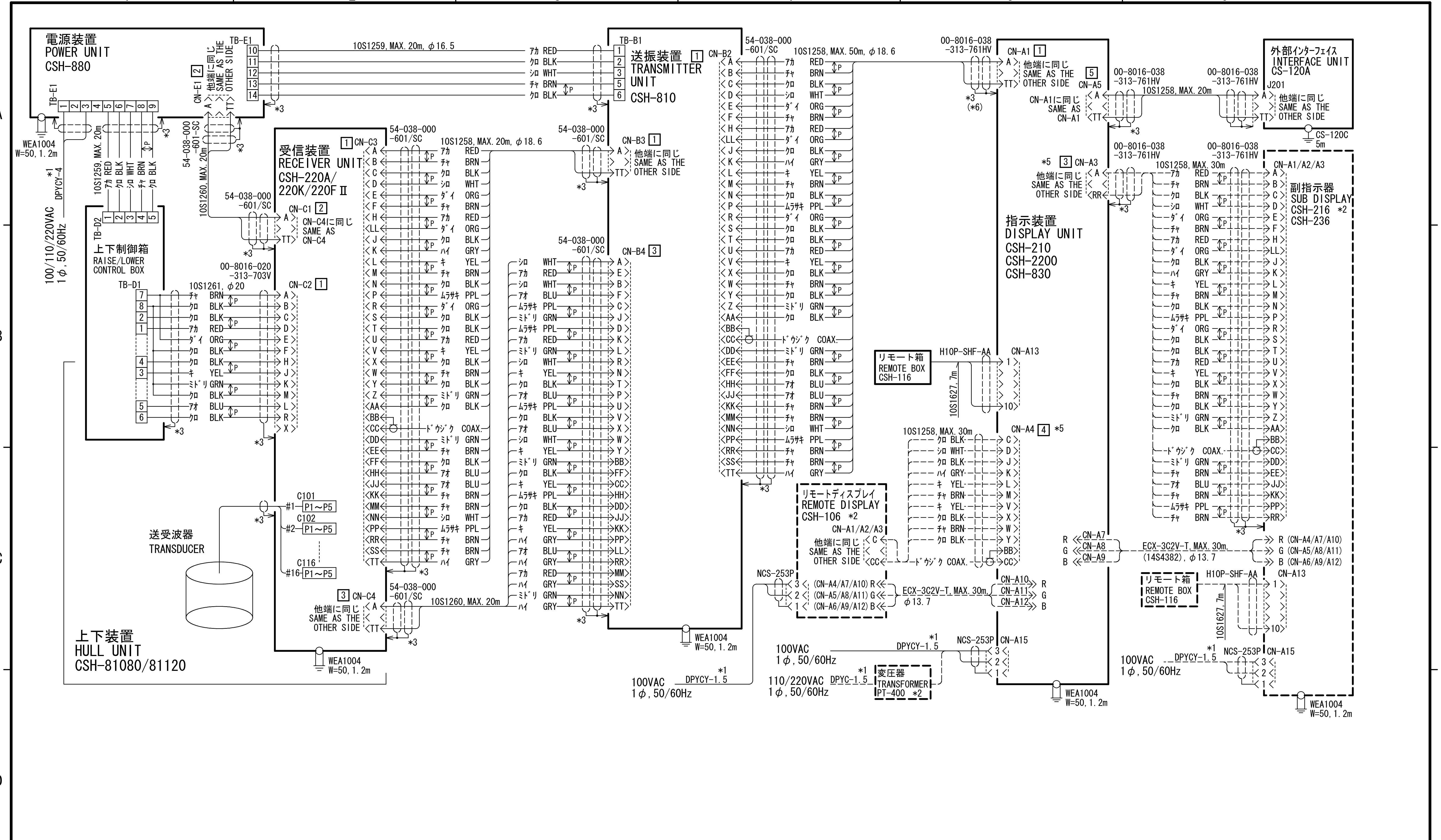

注記
＊１）造船所手配。
＊２）オプション。
＊３）ケーブルクランプで接地。
＊４）□内の数値は誤挿入防止ピンA（太）位置を示す。
ガイドピンB（細）は全て“1”に設定。
＊５）10S1258のRGBライン(FF/HH,MM/NN,SS/TT)は接続しないこと。
画面の映像が歪む原因となることがあります。
＊６）88kHzセットでは、アジロがい装を指示装置に接地しないこと。

NOTE
*1: SHIPYARD SUPPLY.
*2: OPTION.
*3: GROUND THRU CABLE CLAMP.
*4: NUMERAL IN □ SHOWS POSITION OF CONNECTOR GUIDE PIN[B].
GUIDE PIN[S] IS SET ALWAYS TO POSITION "1".
*5: DO NOT CONNECT RGB LINE (CONNECTOR FF/HH, MM/NN, SS/TT) OF CABLE 10S1258. OR INTERFERENCE MAY APPEARS ON THE DISPLAY.
*6: DO NOT CONNECT CABLE ARMOR TO DISPLAY UNIT FOR 88kHz SET.

DRAWN Jul. 12 '06	T.YAMASAKI	TITLE	CSH-81/82/83
CHECKED Jul. 12 '06	T.TAKENO	名称	カラースキャニングソナー 相互結線図
APPROVED Aug. 22 '06	T.Matsuguchi		
SCALE	MASS kg	NAME	COLOR SCANNING SONAR INTERCONNECTION DIAGRAM
DWG. No.	C1290-C01- K		

FURUNO ELECTRIC CO., LTD.

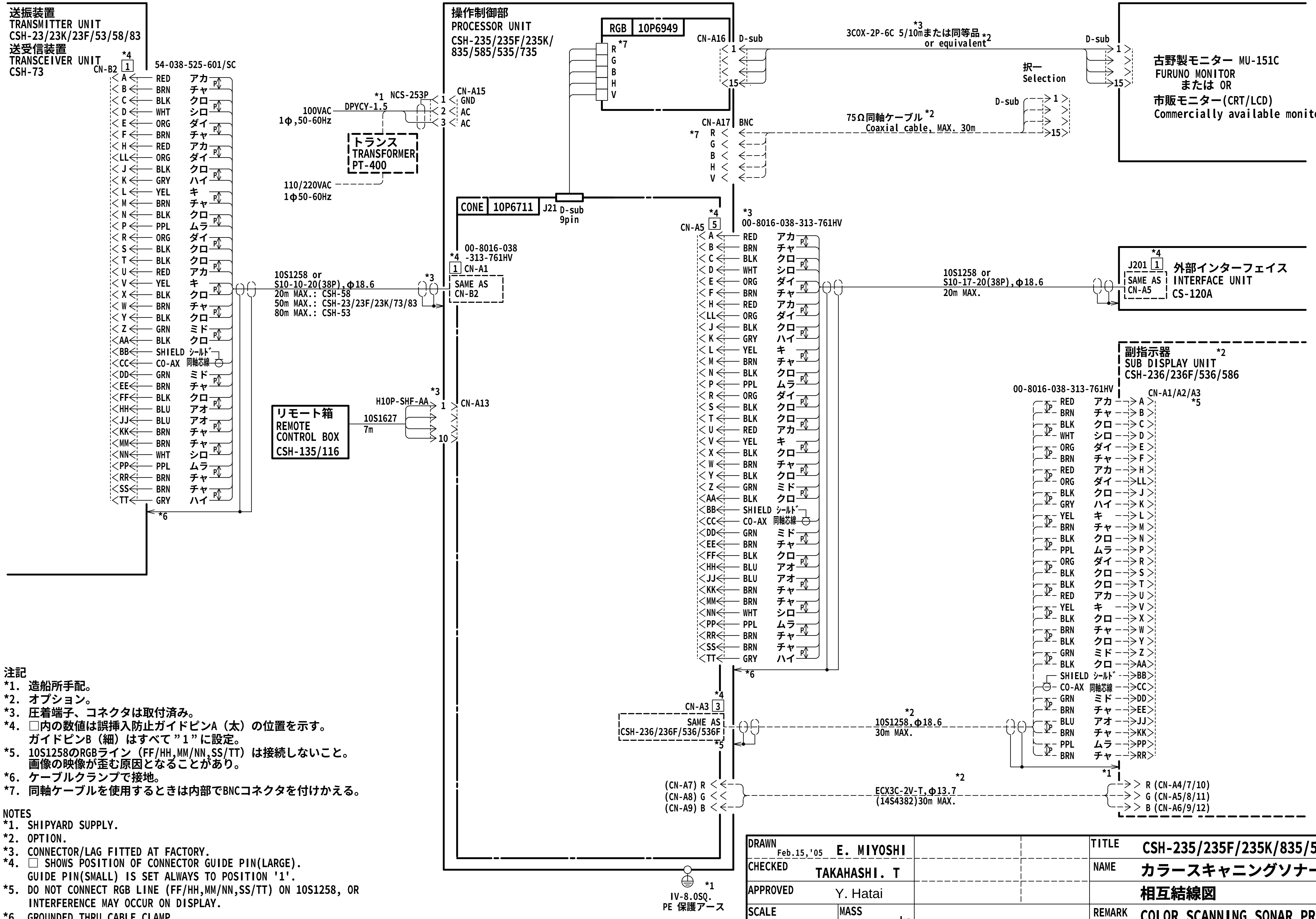

注記
*1. 造船所手配。
*2. オプション。
*3. 圧着端子、コネクタは取付済み。
*4. □内の数値は誤挿入防止ガイドピンA（太）の位置を示す。
ガイドピンB（細）はすべて”1”に設定。
*5. 10S1258のRGBライン（FF/HH,MM/NN,SS/TT）は接続しないこと。
画像の映像が歪む原因となることがあり。
*6. ケーブルクランプで接地。
*7. 同軸ケーブルを使用するときは内部でBNCコネクタを付けかえる。

NOTES
*1. SHIPYARD SUPPLY.
*2. OPTION.
*3. CONNECTOR/LAG FITTED AT FACTORY.
*4. □ SHOWS POSITION OF CONNECTOR GUIDE PIN(LARGE).
GUIDE PIN(SMALL) IS SET ALWAYS TO POSITION '1'.
*5. DO NOT CONNECT RGB LINE (FF/HH,MM/NN,SS/TT) ON 10S1258, OR
INTERFERENCE MAY OCCUR ON DISPLAY.
*6. GROUNDED THRU CABLE CLAMP.
*7. WHEN COAXIAL CABLES ARE USED, REPLACE THE BNC CONNECTORS.

DRAWN Feb.15,'05	E. MIYOSHI	TITLE	CSH-235/235F/235K/835/585/535/735
CHECKED	TAKAHASHI. T	NAME	カラースキャニングソナー操作制御部 相互結線図
APPROVED	Y. Hatai		
SCALE	MASS kg	REMARK	COLOR SCANNING SONAR PROCESSOR UNIT INTERCONNECTION DIAGRAM
DWG No.	C1304-C01- B		

FURUNO ELECTRIC CO., LTD.

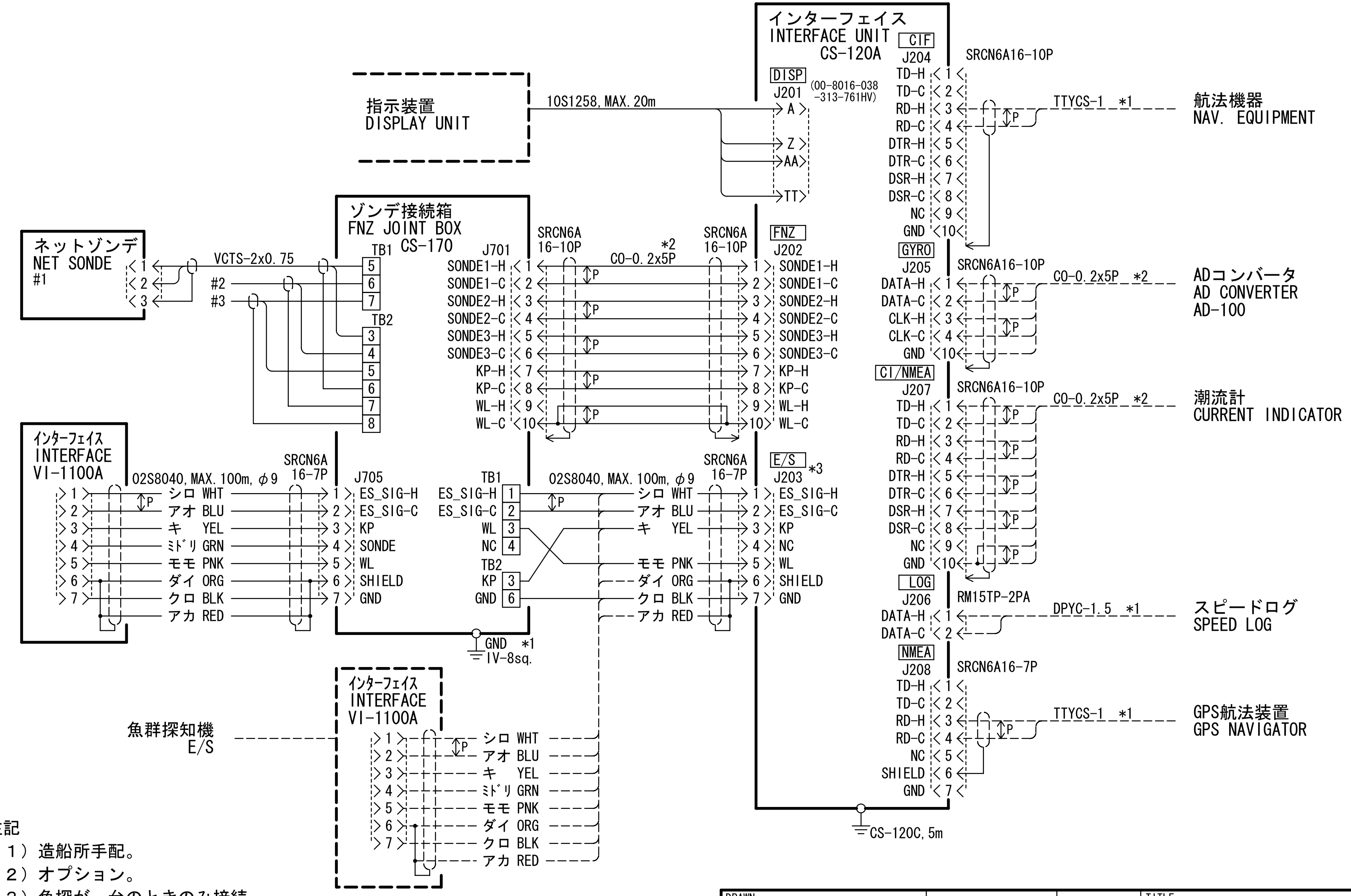

注記
＊１）造船所手配。
＊２）オプション。
＊３）魚探が一台のときのみ接続。

NOTE
*1. SHIPYARD SUPPLY.
*2. OPTION.
*3. USE ONLY FOR ONE E/S UNIT CONNECTION.

CO-0.2x5P: CO-SPEVV-SB-C 0.2x5P, φ13.5

DRAWN Jun. 19 '06	T. YAMASAKI	TITLE	CS-120A
CHECKED Jul. 4 '06	T. TAKENO	名称	インターフェイス 相互結線図
APPROVED Jul.24 '06	T.Matsuguchi		
SCALE	MASS	NAME	INTERFACE UNIT INTERCONNECTION DIAGRAM
DWG. No.	C1238-003- M		

FURUNO ELECTRIC CO., LTD.